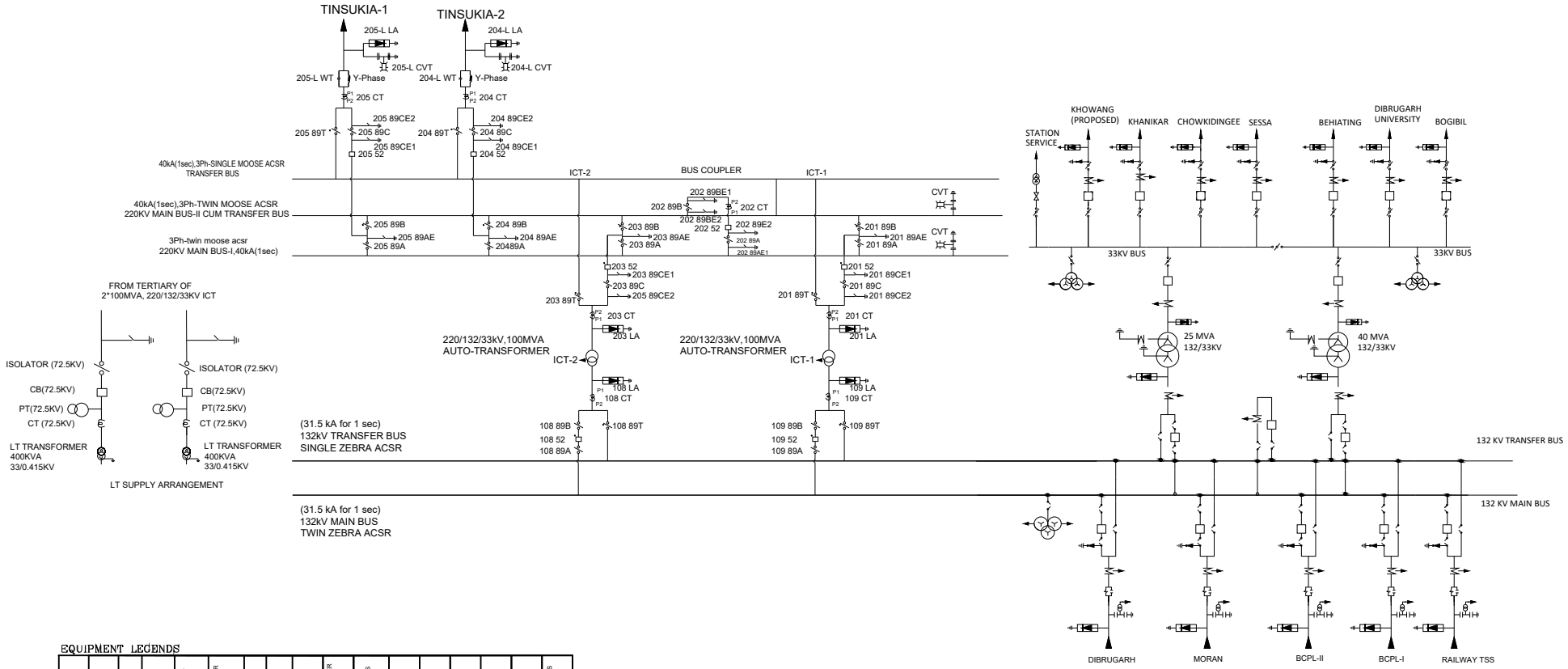

EQUIPMENT LEGENDS

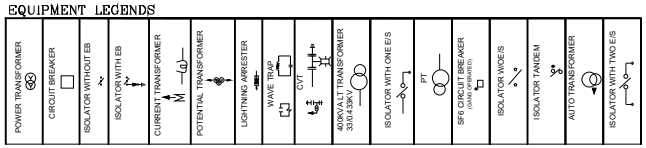

ASSAM ELECTRICITY GRID CORPORATION LIMITED

220/132/33 KV BEHIATING GRID SUB- STATION

SINGLE LINE DIAGRAM OF 220/132/33 KV BEHIATING(KHANIKAR)SUBSTATION

DRAWING NO: AEGCL/BEHIATING/SLD	Sheet 1 OF 1