Before
Assam Electricity Regulatory Commission

Petition for
True Up for FY 2022-23,
Annual Performance Review for FY 2023-24
and
Aggregate Revenue Requirement for
FY 2024-25

November 2023

Assam Electricity Grid Corporation Limited

CIN: U40101AS2003GC007238

(A Govt. of Assam Undertaking)

[Registered Office: Bijulee Bhawan, Paltan Bazar, Guwahati – 781 001]

Table of Contents

1.	Covering Letter	1
2.	Affidavit	2
3.	Payment Receipt	4
4.	Petition	5
5.	Regulatory Formats of AEGCL	91
6.	Annexure I: Audited Annual Accounts for FY 2022-23	124
7.	Annexure-II: Energy Balance for FY 2022-23 certified by SLDC	170
8.	Annexure-III: Energy Audit Report	172
9.	Annexure-IV: Fund Utilisation under Colony Maintenance for FY 2022-23	199
10.	Annexure-V: Revised Capital Investment Plan of AEGCL for FY 2022-23 to FY 2024-25	204
11.	Annexure-V(A): NERPSIP Status Report	260
12.	Annexure-VI: Conversion of Government Grants & Loans into Equity for FY 2022-23	265
13.	Annexure-VII: Transmission System Availability for FY 2022-23	269
14.	Annexure-VIII: New Grid Elements for FY 2023-24	272
15.	Annexure-IX: Energy Balance for FY 2023-24 Certified by SLDC	274
16.	Annexure-X: Estimated Expenditure for Cyber Security for FY 2023-24	276
17.	Annexure-XI: Conversion of Government Grants & Loans into Equity for FY 2023-24	278
18.	Annexure-XII: SAMAST Status Report	282

ASSAM ELECTRICITY GRID CORPORATION LIMITED
OFFICE OF THE MANAGING DIRECTOR
Regd. Office:(FIRST FLOOR), BIJULEE BHAWAN, PALTANBAZAR; GUWAHATI - 781001
CIN: U40101AS2003SGC007238GSTIN: 18AAFCA4973J9Z3
PHONE: 0361-2739520 Web: www.aegcl.co.in

No. AEGCL/HQ/ACCTTS/2007/9(Part III)/11 Date:30 -Nov-2023

To,

The Secretary,
Assam Electricity Regulatory Commission,
ASEB Campus, Dwarandhar,
G.S.Road, Sixth Mile,
Guwahati- 781022.

Sub.: Submission of Tariff Petition for True- up for **FY 2022-23**, Annual Performance Review for **FY 2023-24** & Aggregate Revenue Requirement for **FY 2024-25** of Assam Electricity Grid Corporation Limited (AEGCL).

Sir,

Reference to the subject cited above, I am furnishing herewith the Tariff Petition for True- up for **FY 2022-23**, Annual Performance Review for **FY 2023-24** & Aggregate Revenue Requirement for **FY 2024-25** of Assam Electricity Grid Corporation Limited (AEGCL).

Enclo.:-

1) Six copies of the above mentioned Tariff Petition

Yours faithfully,

Ankur Pratim Das

General Manager (M&PR),
AEGCL, Bijulee Bhawan,
Paltanbazar, Guwahati-781001.

BEFORE THE HON'BLE ASSAM ELECTRICITY REGULATORY COMMISSION

PETITION NO. _____
CASE NO._____
(to be filed by the Office)

IN THE MATTER OF

Truing up for FY 2022-23, Annual Performance Review for FY 2023-24 & Aggregate Revenue Requirement for FY 2024-25 of AEGCL.

IN THE MATTER OF

Assam Electricity Grid Corporation Limited
Bijulee Bhawan, Paltanbazar,
Guwahati – 781 001. Petitioner

I, Ankur Pratim Das, son of Sri Madan Chandra Das, aged 43 years, residing at Guwahati do solemnly affirm and say as follows:

I am the General Manager, Marketing & PR, of Assam Electricity Grid Corporation Limited, the petitioner in the above matter and am duly authorized by the said Petitioner to make this affidavit for and on behalf of the Assam Electricity Grid Corporation Limited.

The Statement made in the Petition based on information received from official records and I believe them to reflect truly and no material has been concealed from the statements so made or documents or supporting data etc. attached.

Solemnly affirm at Guwahati on 30th day of November, 2023 that the contents of this affidavit are true to my knowledge, no part of it is false or no material has been concealed therefore and misleading material included therein.

Place: Guwahati
Date 30-11-2023

Deponent
Ankur Pratim Das

By order of the Commission
Secretary of the Commission

Ankur Pratim Das
General Manager (M&PR)
O/o the MD, AEGCL

BEFORE THE HON'BLE ASSAM ELECTRICITY REGULATORY COMMISSION

FILING NO. .....
CASE NO. .....

IN THE MATTER OF: Petition for the approval of the Truing up for FY 2022-23, Annual Performance Review for FY 2023-23 & Aggregate Revenue Requirement for FY 2024-25 of AEGCL

AND

IN THE MATTER OF: Assam Electricity Grid Corporation Limited incorporated under the provisions of the Companies Act, 1956 and having its registered office in the State of Assam.

THE HUMBLE APPLICANT ABOVE NAMED MOST RESPECTFULLY SUBMITS:

1. That the Assam Electricity Grid Corporation Limited, hereinafter named as AEGCL, is a successor corporate entity, formed in pursuant to the notification of the Government of Assam, notified under sub-sections (1), (2), (5), (6) and (7) of Section 131 and Section 133 of the Electricity Act 2003 (Central Act 36 of 2003), for the purpose of transfer and vesting of functions, properties, interests, rights, obligations and liabilities, along with the transfer of Personnel of the Board to the successor corporate entities.

2. That the Assam Electricity Grid Corporation Limited is a company incorporated with the main object of undertaking electricity transmission in the state of Assam as State Transmission Utility (STU).

3. That the Assam Electricity Grid Corporation Limited is a deemed licensee under the provisions laid down in Section 14 Proviso 5, read with Section 131 (2) of the Electricity Act 2003.

4. That the licensee is now filing the petition for the approval of its Truing up for FY 2022-23, Annual Performance Review for FY 2023-24 & Aggregate Revenue Requirement for FY 2024-25 of AEGCL.

Ankur Pratim Das

(PETITIONER)

Ankur Pratim Das
General Manager (M&PR)
O/o the MD, AEGCL

yono SBI BUSINESS

Welcome, KANGKAN THAKURIA (Uploader)
Corporate: ASSAM ELETRICITY GRID PRIN AC (286781)

Customer Care / Mail Box Help

Dashboard | File Configuration | File Upload | Profile | Reports | Site Map | My Accounts | Stationery Management | User Manuals

You are here: Reports > File Upload Status

- Download MIS
- Forex Card Rates
- Download by Date
- Pending For Authorization
- Files Under Process
- Download By File
- Download Beneficiary List
- Bulk Download Challan
- Pending Transactions
- File Upload Status
- Account Based MIS
- Download Duplicate Beneficiaries
- DD DashBoard Status
- File Upload
- File Download(Mandate Files,MCC Files,Instruction Files)
- Late Returns
- Beneficiary LEI Setup for NEFT/RTGS
- Stationery Request Enquiry

Your previous site visit: 22-Nov-2023 16:09 IST

File Upload Status

28-Nov-2023 [01:26 PM IST]

e-PayOrder Number	AOLQ592241
Debit Status	Success
Remarks	Completed Successfully
Scheduled Time	23-Nov-2023 01:49 IST

23-11-2023

30341598688

KANGKAN THAKURIA

1500000.00

00000030019619154
A T ROAD, GUWAHATI

KASHI NATH BAISHYA Authorizer 1
Paresh Kumar Barman Authorizer 2

AOLQ592241

CMP00000000755345680

Counterfoil Description	30019619154
Transaction Type	FT

Debit Account Details

Account No.	Branch	Amount
00000030019619154	A T ROAD, GUWAHATI	1500000.00

Credit Account Details

Account No. / Name	UTR_NO	Branch	Amount	Credit Status
30341598688 / AERC	187524709	SIXMILE	1500000.00	Success

BACK

Copyright © SBI CMP Services APM ID: Serv_Tran_595

Before
Assam Electricity Regulatory Commission

Petition for
True Up for FY 2022-23,
Annual Performance Review for FY 2023-24
and
Aggregate Revenue Requirement for
FY 2024-25

November 2023

Assam Electricity Grid Corporation Limited

CIN: U40101AS2003GC007238
(A Govt. of Assam Undertaking)
[Registered Office: Bijulee Bhawan, Paltan Bazar, Guwahati – 781 001]

TABLE OF CONTENTS

1 EXECUTIVE SUMMARY 6

1.1 PREAMBLE 6
1.2 TRUE UP FOR FY 2022-23 6
1.3 ANNUAL PERFORMANCE REVIEW FOR FY 2023-24 7
1.4 AGGREGATE REVENUE REQUIREMENT FOR FY 2024-25 7

2 INTRODUCTION 9

2.1 AEGCL 9
2.2 APPROACH FOR FILING THE PETITION 9
2.3 PROVISION OF LAW 10
2.4 PETITION STRUCTURE 11

3 TRUE UP FOR FY 2022-23 13

3.1 PREAMBLE 13
3.2 PRINCIPLES OF TRUING UP FOR FY 2022-23 13
3.3 TRANSMISSION LOSS FOR FY 2022-23 13
3.4 FIXED COST FOR FY 2022-23 14
3.5 CATEGORIZATION OF HEADS OF EXPENSES 14
3.6 OPERATION AND MAINTENANCE EXPENSES FOR FY 2022-23 14
3.7 SHARING OF GAINS & LOSSES FOR FY 2022-23 23
3.8 CAPITAL EXPENDITURE AND CAPITALIZATION FOR FY 2022-23 25
3.9 GROSS FIXED ASSETS FOR FY 2022-23 26
3.10 DEPRECIATION FOR FY 2022-23 26
3.11 INTEREST AND FINANCE CHARGES FOR FY 2022-23 27
3.12 INTEREST ON WORKING CAPITAL FOR FY 2022-23 30
3.13 COMPUTATION OF RATE OF INTEREST ON WORKING CAPITAL 31
3.14 RETURN ON EQUITY FOR FY 2022-23 31
3.15 BULK SUPPLY TARIFF (BST) – TERMINAL BENEFITS FOR FY 2022-23 33
3.16 NON-TARIFF INCOME FOR FY 2022-23 33
3.17 DEDUCTION OF INTEREST ON GPF FROM NON-TARIFF INCOME 34
3.18 OPEN ACCESS CONSUMER'S WHEELING CHARGES 35
3.19 INCENTIVE ON HIGHER TRANSMISSION AVAILABILITY FOR FY 2022-23 35
3.20 CONTRIBUTION TO CONTINGENCY RESERVE FOR 2022-23 36
3.21 TRUING UP FOR FY 2022-23 AFTER SHARING OF GAINS & LOSSES FOR FY 2022-23 37

4 ANNUAL PERFORMANCE REVIEW OF FY 2023-24 39

4.1 PREAMBLE 39
4.2 TRANSMISSION LOSS FOR FY 2023-24 39
4.3 ESTIMATION OF EXPENSES FOR THE FY 2023-24 40
4.4 OPERATION AND MAINTENANCE EXPENSES FOR FY 2023-24 41
4.5 CAPITAL EXPENDITURE AND CAPITALISATION FOR FY 2023-24 52
4.6 GROSS FIXED ASSETS FOR FY 2023-24 53
4.7 DEPRECIATION FOR FY 2023-24 54
4.8 INTEREST AND FINANCE CHARGES FOR FY 2023-24 55
4.9 INTEREST ON WORKING CAPITAL FOR FY 2023-24 58
4.10 COMPUTATION OF RATE OF INTEREST ON WORKING CAPITAL 59

4.11 RETURN ON EQUITY FOR FY 2023-24 59
4.12 BULK SUPPLY TARIFF (BST) – TERMINAL BENEFITS FOR FY 2023-24 61
4.13 NON-TARIFF INCOME FOR FY 2023-24 61
4.14 OPEN ACCESS CONSUMER'S WHEELING CHARGES 63
4.15 CONTRIBUTION TO CONTINGENCY RESERVES FOR FY 2023-24 63
4.16 ANNUAL PERFORMANCE REVIEW FOR FY 2023-24 64

5 AGGREGATE REVENUE REQUIREMENT FOR FY 2024-25 65

5.1 PREAMBLE 65
5.2 AGGREGATE REVENUE REQUIREMENT FOR FY 2024-25 65
5.3 PRINCIPLES OF ARR FOR FY 2024-25 65
5.4 TRANSMISSION LOSSES FOR FY 2024-25 65
5.5 TRANSMISSION AVAILABILITY FOR FY 2024-25 66
5.6 FIXED COST FOR FY 2024-25 66
5.7 OPERATION AND MAINTENANCE EXPENSES FOR 2024-25 67
5.8 CAPITAL EXPENDITURE AND CAPITALIZATION FOR FY 2024-25 75
5.9 FUNDING OF CAPITALIZATION FOR FY 2024-25 75
5.10 GROSS FIXED ASSETS FOR FY 2024-25 76
5.11 DEPRECIATION FOR FY 2024-25 76
5.12 NORMATIVE INTEREST AND FINANCE CHARGES FOR FY 2024-25 78
5.13 INTEREST ON WORKING CAPITAL FOR FY 2024-25 78
5.14 COMPUTATION OF RATE OF INTEREST ON WORKING CAPITAL 79
5.15 RETURN ON EQUITY FOR FY 2024-25 79
5.16 TAXES FOR FY 2024-25 80
5.17 BULK SUPPLY TARIFF (BST) – TERMINAL BENEFITS FOR FY 2024-25 80
5.18 NON-TARIFF INCOME FOR FY 2024-25 80
5.19 INCOME FROM OPEN ACCESS CONSUMERS FOR FY 2024-25 82
5.20 CONTRIBUTION TO CONTINGENCY RESERVES FOR FY 2024-25 82
5.21 AGGREGATE REVENUE REQUIREMENT FOR FY 2024-25 83
5.22 TARIFF COMPUTATION FOR FY 2024-25 84

6 COMPLIANCE OF DIRECTIVES 85

7 PRAYERS BEFORE THE HON'BLE COMMISSION 86

TABLE OF CONTENTS

TABLE 1: TRUE UP FOR FY 2022-23 6
TABLE 2: ANNUAL PERFORMANCE REVIEW FOR FY 2023-24 7
TABLE 3: AGGREGATE REVENUE REQUIREMENT FOR FY 2024-25 7
TABLE 4: TRANSMISSION LINE LENGTH OF AEGCL 9
TABLE 5: NO. OF GRID SUBSTATION OF AEGCL 9
TABLE 6: TRANSMISSION LOSS FOR FY 2022-23 13
TABLE 7: OPERATION AND MAINTENANCE EXPENSES FOR FY 2022-23 16
TABLE 8: NORMATIVE REPAIRS AND MAINTENANCE EXPENSES FOR FY 2022-23 17
TABLE 9: NORMATIVE EMPLOYEE EXPENSES FOR FY 2022-23 20
TABLE 10: NORMATIVE A&G EXPENSES FOR FY 2022-23 20
TABLE 11: REPAIR AND MAINTENANCE EXPENSES FOR FY 2022-23 21
TABLE 12: EMPLOYEE EXPENSES FOR FY 2022-23 21
TABLE 13: MANPOWER DETAILS FOR FY 2022-23 22
TABLE 14: ADMINISTRATIVE AND GENERAL EXPENSES FOR FY 2022-23 22
TABLE 15: SHARING OF GAINS / (LOSSES) -O&M EXPENSES FOR FY 2022-23 24
TABLE 16: FUNDING FOR CAPITALISATION FOR FY 2022-23 25
TABLE 17: GROSS FIXED ASSETS FOR FY 2022-23 26
TABLE 18: DEPRECIATION FOR FY 2022-23 27
TABLE 19: NORMATIVE INTEREST AND FINANCE CHARGES FOR FY 2022-23 28
TABLE 20: INTEREST AND FINANCE CHARGES FOR FY 2022-23 28
TABLE 21: INTEREST ON WORKING CAPITAL FOR FY 2022-23 30
TABLE 22: MCLR RATE FOR FY 2022-23 (LAST 1 YEAR) 31
TABLE 23: CONVERSION OF GOVT. GRANTS & LOANS TO EQUITY 32
TABLE 24: RETURN ON EQUITY FOR FY 2022-23 32
TABLE 25: BULK SUPPLY TARIFF (BST) – TERMINAL BENEFITS FOR FY 2022-23 33
TABLE 26: NON-TARIFF INCOME FOR FY 2022-23 33
TABLE 27: TRANSMISSION INCENTIVE FOR FY 2022-23 35
TABLE 28: CONTINGENCY RESERVE FOR FY 2022-23 37
TABLE 29: TRUING UP FOR FY 2022-23 37
TABLE 30: TRANSMISSION LOSS FOR FY 2023-24 40
TABLE 31: OPERATION AND MAINTENANCE EXPENSES FOR FY 2023-24 42
TABLE 32: WPI INFLATION COMPUTATION FOR FY 2023-24 43
TABLE 33: CPI INFLATION COMPUTATION FOR FY 2023-24 43
TABLE 34: NORMATIVE R&M EXPENSES FOR FY 2023-24 43
TABLE 35: NORMATIVE EMPLOYEE EXPENSE FOR FY 2023-24 47
TABLE 36: NORMATIVE A&G EXPENSES FOR FY 2023-24 48
TABLE 37: REPAIR AND MAINTENANCE EXPENSES OF FY 2023-24 49
TABLE 38: EMPLOYEE EXPENSES OF FY 2023-24 49
TABLE 39: ESTIMATED MANPOWER DETAILS OF AEGCL FOR FY 2023-24 50
TABLE 40: ADMINISTRATIVE AND GENERAL EXPENSES FOR FY 2023-24 50
TABLE 41: SCHEME WISE CAPITAL EXPENDITURE FOR FY 2023-24 52
TABLE 42: SCHEME WISE CAPITALISATION FOR FY 2023-24 52
TABLE 43: CAPITALIZATION FOR FY 2023-24 AND ITS FUNDING 53
TABLE 44: GROSS FIXED ASSETS FOR FY 2023-24 53
TABLE 45: DEPRECIATION FOR FY 2023-24 54
TABLE 46: NORMATIVE INTEREST AND FINANCE CHARGES FOR FY 2023-24 55

TABLE 47: INTEREST AND FINANCE CHARGES FOR FY 2023-24 **56**
TABLE 48: INTEREST ON WORKING CAPITAL FOR FY 2023-24 **59**
TABLE 49: MCLR RATE FOR FY 2023-24 (LAST 6 MONTHS) **59**
TABLE 50: CONVERSION OF GOVT. GRANTS & LOANS TO EQUITY **60**
TABLE 51: RETURN ON EQUITY FOR FY 2023-24 **60**
TABLE 52: CONVERSION OF GOVT. LOANS AND GRANTS INTO EQUITY DURING FY 2023-24 **60**
TABLE 53: SPECIAL CHARGES –BULK SUPPLY TARIFF (BST)FOR FY2023-24 **61**
TABLE 54: NON-TARIFF INCOME FOR FY 2023-24 **61**
TABLE 55: CONTRIBUTION TOWARDS CONTINGENCY RESERVES FOR FY 2023-24 **64**
TABLE 56: ANNUAL PERFORMANCE REVIEW FOR FY 2023-24 **64**
TABLE 57: TRANSMISSION LOSSES FOR THE FY 2024-25 **66**
TABLE 58: TRANSMISSION AVAILABILITY FACTOR FOR THE FY 2024-25 **66**
TABLE 59: OPERATION AND MAINTENANCE EXPENSES FOR FY 2024-25 **68**
TABLE 60 : WPI INFLATION FOR FY 2024-25 **69**
TABLE 61: CPI INFLATION FOR FY 2024-25 **69**
TABLE 62: REPAIR AND MAINTENANCE EXPENSES FOR 2024-25 **70**
TABLE 63 : PROVISION FOR CYBER SECURITY FOR FY 2024-25 **73**
TABLE 64 : EMPLOYEE EXPENSES FOR FY 2024-25 **74**
TABLE 65: PROJECTED MANPOWER DETAILS OF FY 2024-25 **74**
TABLE 66 : ADMINISTRATIVE & GENERAL EXPENSES FOR FY 2024-25 **75**
TABLE 67: FUNDING OF CAPITALISATION FOR FY 2024-25 **75**
TABLE 68: GROSS FIXED ASSETS FOR FY 2024-25 **76**
TABLE 69: DEPRECIATION FOR FY 2024-25 **77**
TABLE 70 : NORMATIVE INTEREST & FINANCE CHARGES FOR FY 2024-25 **78**
TABLE 71: INTEREST ON WORKING CAPITAL FOR FY 2024-25 **78**
TABLE 72: MCLR RATE FOR FY 2023-24 (LAST 6 MONTHS) **79**
TABLE 73: RETURN ON EQUITY FOR FY 2024-25 **79**
TABLE 74: BST FOR FY 2024-25 **80**
TABLE 75: NON-TARIFF INCOME FOR 2024-25 **81**
TABLE 76 : INCOME FROM OPEN ACCESS FOR FY 2024-25 **82**
TABLE 77: CONTRIBUTION TOWARDS CONTINGENCY RESERVES FOR FY 2024-25 **83**
TABLE 78: AGGREGATE REVENUE REQUIREMENT FOR FY 2024-25 **83**
TABLE 79 : TOTAL GAP OF FY 2022-23 ALONG WITH CARRYING COST **84**
TABLE 80 : CARRYING/ HOLDING COST OF FY 2022-23 **84**
TABLE 81: TARIFF COMPUTATION FOR FY 2024-25 **84**

1 EXECUTIVE SUMMARY

1.1 Preamble

1.1.1 This section summarizes the petition for True Up for FY 2022-23, Annual Performance Review for FY 2023-24, and Aggregate Revenue Requirement for FY 2024-25 of Assam Electricity Grid Corporation Ltd. (AEGCL).

1.2 True Up for FY 2022-23

1.2.1 AEGCL has calculated its ARR for FY 2022-23 as part of True Up for FY 2022-23. AEGCL has presented the actual cost based on Audited Annual Accounts for FY 2022-23 and applied norms wherever applicable as per Assam Electricity Regulatory Commission (Terms and Conditions for determination of Multi Year Tariff) Regulations, 2021. A detailed comparison of various cost components has been presented in Chapter of True Up for FY 2022-23. A summary of the proposed True Up for FY 2022-23 with the approved ARR for FY 2022-23 is presented below:

Table 1: True Up for FY 2022-23

(Rs. Crs.)

S.N.	Particulars	Approved in T.O. dtd. 21.03.2022	AEGCL Submission
1	O&M Expenses	223.11	219.05
a	Employee Cost	184.39	185.39
b	R&M Expenses	28.89	22.99
c	A&G Expenses	9.83	10.67
2	Depreciation	35.96	138.92
3	Interest & Finance Charges	24.32	15.06
4	Interest on Working Capital	12.30	16.58
5	BST for Pension Trust Fund	214.38	219.71
6	Return on Equity	13.68	75.70
7	Contribution to Contingency Reserve	2.71	2.73
8	Less: Non-Tariff Income/ Other Income	54.01	78.50
9	**Aggregate Revenue Requirement**	**472.45**	**609.24**
10	Add: Incentive on higher transmission availability	-	3.38
11	Add: Sharing of (Gains)/Loss	-	(3.78)
12	**ARR after Sharing (Gains)/Losses and Incentive**	**472.45**	**608.84**
13	Less: Revenue from STOA/MTOA Charges	12.00	4.25
14	**Net Aggregate Revenue Requirement**	**460.45**	**604.59**
15	**Revenue Gap /(Surplus) for FY 2022-23**	-	**144.14**

1.3 Annual Performance Review for FY 2023-24

1.3.1 As per AERC (Terms and Conditions for determination of Multi Year Tariff) Regulations, 2021, APR for FY 2023-24 is based on the actuals of H1 and estimation of H2 which is presented below:

Table 2: Annual Performance Review for FY 2023-24

(Rs. Crs.)

S.N	Particulars	Approved in T.O. dt 29.03.2023	FY 2023-24 H1	FY 2023-24 H2	AEGCL Estimation
1	O&M Expenses	239.07	119.98	119.98	239.97
a	Employee Cost	196.94	98.68	98.68	197.36
b	R&M Expenses	30.60	15.55	15.55	31.10
c	A&G Expenses	11.53	5.76	5.76	11.51
2	Depreciation	117.69	47.79	47.79	95.58
3	Interest & Finance Charges	9.97	2.00	2.00	3.99
4	Interest on Working Capital	17.73	9.64	9.64	19.29
5	BST for Pension Trust Fund	230.34	125.77	125.77	251.55
6	Return on Equity	111.65	60.66	60.66	121.32
7	Contribution towards Contingency Reserve	2.89	1.51	1.51	3.02
8	Less: Non-Tariff Income/ Other Income	58.45	47.10	20.13	67.23
9	**Aggregate Revenue Requirement**	**670.89**	**320.26**	**347.23**	**667.49**
10	Less: Revenue from STOA/MTOA Charges	12.00	1.03	3.55	4.58
11	**Net Aggregate Revenue Requirement**	**658.89**	**319.23**	**343.68**	**662.91**
12	**Revenue Gap for FY 2023-24**				**4.03**

1.4 Aggregate Revenue Requirement for FY 2024-25

As per AERC (Terms and Conditions for Determination of Multi Year Tariff) Regulations, 2021, AEGCL has presented ARR for FY 2024-25. The summary of Projected ARR for FY 2024-25 is shown in the table below:

Table 3: Aggregate Revenue Requirement for FY 2024-25

(Rs.Crs.)

S. N	Particulars	As per T.O. dated 21.03.2022	FY 2024-25
1	O&M Expenses	249.87	261.83
a	Employee Cost	209.48	210.10
b	R&M Expenses	29.73	39.31

(Rs.Crs.)

S. N	Particulars	As per T.O. dated 21.03.2022	FY 2024-25
c	A&G Expenses	10.66	12.42
2	Depreciation	39.47	126.64
3	Interest & Finance Charges	21.79	0.34
4	Interest on Working Capital	14.83	20.96
5	BST for Pension Trust Fund	250.79	252.81
6	Return on Equity	14.27	124.28
7	Contribution to Contingency Reserve	3.16	4.03
8	Less: Non-Tariff Income/ Other Income	54.01	67.20
9	**Aggregate Revenue Requirement**	**540.17**	**723.69**
10	Less: Revenue from STOA/MTOA Charges	12.00	4.58
11	**Net Aggregate Revenue Requirement**	**528.17**	**719.11**
12	**Revenue Gap /(Surplus) for FY 2024-25**	**-**	**190.94**

2 INTRODUCTION

2.1 AEGCL

2.1.1 Assam Electricity Grid Corporation Limited (*hereinafter to be referred to as "AEGCL" or the "Petitioner"*) owns and operates the transmission system previously owned by Assam State Electricity Board (ASEB). AEGCL started functioning as a separate entity from December 10, 2004.

2.1.2 AEGCL has been developing, operating, and maintaining a transmission system consisting of total line length of 5968.48 Ckt. Km and seventy-six grid substations at different voltage levels along with associated equipment and terminal bays, etc.

Table 4: Transmission Line Length of AEGCL

Sr. No.	Voltage Level	Length in Ckt. Km		
		FY 2022-23	FY 2021-22	FY 2020-21
1.	400 kV	7.20	7.20	7.20
2.	220 kV	2048.50	2048.05	2048.05
3.	132 kV	3299.78	3140.95	3069.19
4.	66 kV	613.00	613.00	613.00
	Total	**5968.48**	**5809.65**	**5737.45**

Table 5: No. of Grid Substation of AEGCL

Sr. No	Voltage Level	Nos of GSS		
		FY 2022-23	FY 2021-22	FY 2020-21
1	400/220/132/33 kV	1	1	1
2	220/132 kV	1	1	1
3	220/132/66/33 kV	1	1	1
4	220/132/33 kV	9	9	9
5	220/33 kV	1	1	1
6	132/66/33 kV	1	1	1
7	132/33 kV	61	54	52
8	132/11 kV	1	1	1
	Total	**76**	**69**	**67**

2.2 Approach for filing the petition

a) The Hon'ble Commission notified the AERC (Terms and Conditions for determination of MYT) Regulations, 2021 (hereinafter to be referred as MYT Regulations 2021) which are applicable for determination of tariff from 1st April 2022 onwards and have defined control period from FY 2022-23 to FY 2024-25. As per the provisions of these MYT Regulations, 2021, AEGCL is filing the true up petition for FY 2022-23 based on Audited Annual Accounts

for consideration of the Hon'ble Commission along with the specified formats providing information on various operational and performance parameters.

b) Since FY 2022-23 is completed and Audited Annual Accounts for the said year are now available, hence AEGCL is filing the true up petition for FY 2022-23 along with audited accounts as per the provisions of MYT Regulations, 2021.

c) Thereafter, Hon'ble Commission vide Order dated 21st March 2022 approved the ARR for FY 2022-23.

d) As per the provisions of the MYT Regulations, 2021, AEGCL is filing Annual Performance Review petition for FY 2023-24 based on 6 months actual (1st April 2023 to 30th September 2023) and 6 months estimation (1st Oct 2023 to 31st Mar 2024) and Aggregate Revenue Requirement for 2024-25.

2.3 Provision of Law

a) The Hon'ble Commission has notified the MYT Regulations, 2021. The scope of this regulation included tariff determination for transmission licensee under Multi Year Tariff principle. From 1st April 2022, MYT Regulations, 2021 are applicable till 31st March 2025, hence True Up for FY 2022-23, APR for FY 2023-24 and ARR for FY 2024-25 are prepared as per the provisions of MYT Regulations, 2021. The relevant extract of the applicability of MYT Regulations 2021 is provided below for reference.

"3 Object, Scope of Regulations and Extent of Application

3.1 *The objective of these Regulations is to specify the terms and conditions for the determination of tariffs by the Assam Electricity Regulatory Commission for the supply of electricity by a generating company to a distribution licensee, for transmission of electricity, for wheeling of electricity and for retail sale of electricity, and SLDC.*

3.2 *The Commission in specifying these Regulations is guided by the principles contained in Sections 61 and 62 of the Act, the National Electricity Policy, 2005 and the Tariff Policy, 2016 notified by the Central Government under Section 3 of the Act.*

3.3 *The Commission shall determine tariff, including terms and conditions thereof, for all matters for which the Commission has jurisdiction under the Act, including in the following cases :-*

(i) Supply of electricity by a Generating Company to a Distribution Licensee:
(ii) Intra-State transmission of electricity;
(iii) Wheeling Business for Distribution of electricity;
(iv) Retail Supply Business of electricity;
(v) State Load Dispatch Centre;

Provided that the Commission shall determine such tariff, having regard to the terms and conditions contained in Chapter 6,7, 8, 9 & 10 of these Regulations for applications under this Regulation for determination of tariff, for generation, transmission, distribution Wheeling Business and retail supply business and SLDC:

Provided further that the Commission, while determining tariff upon an application made to it under this Regulation, shall also have regard to the terms and conditions of tariff as may be specified by the State Commission of such other State and/or the terms and conditions of tariff as may be specified by the Central Commission where any of the Parties to such transaction come under the jurisdiction of such State Commission or of the Central Commission.

***3.4** Notwithstanding anything contained in these Regulations, the Commission shall adopt the tariff if such tariff has been determined through a transparent process of bidding in accordance with the guidelines issued by the Central Government.*
"

a) Accordingly, as per the provisions of AERC (MYT) Regulations, 2021, AEGCL has prepared the True-up petition for FY 2022-23. Further, Annual Performance Review for FY 2023-24 and Aggregate Revenue Requirement for FY 2024-25 is proposed. AEGCL is submitting the above petition for approval of the Hon'ble Commission.

2.4 Petition Structure

The True Up, APR and ARR Petition included the following Chapters:

Sr. No.	Section	Contents
1	Section 1	Executive summary of Petition
2	Section 2	Introduction and overall approach to filling the Petition
3	Section 3	True Up for FY 2022-23

Sr. No.	Section	Contents
4	Section 4	Annual Performance Review for FY 2023-24
5	Section 5	Aggregate Revenue Requirement for FY 2024-25
6	Section 6	Directives of Compliances
7	Section 7	Prayers to the Hon'ble Commission

3 TRUE UP FOR FY 2022-23

3.1 Preamble

3.1.1 This section outlines the performance of AEGCL for FY 2022-23 and is based on the Audited Annual Accounts. In line with the provisions of MYT Regulations, 2021, AEGCL hereby submits the True Up Petition comparing the actual performance during FY 2022-23 with the approved by the Hon'ble Commission for FY 2022-23 vide tariff order dated 21.03.2022.

3.2 Principles of Truing Up for FY 2022-23

3.2.1 AEGCL submits the actual performance based on the audited accounts for true up for FY 2022-23. This chapter summarizes each of the components of Annual Transmission Charges for FY 2022-23 and requests the Hon'ble Commission to approve the true up for FY 2022-23. The Audited Annual Accounts for FY 2022-23 are attached as **Annexure-I**.

3.2.2 The following sections outline the deviations in actual expenses and revenue for FY 2022-23 based on the Audited Accounts of AEGCL in comparison with the approved by the Hon'ble Commission for FY 2022-23 vide tariff order dated 21.03.2022.

3.3 Transmission Loss for FY 2022-23

3.3.1 AEGCL has achieved a significant reduction in transmission losses in recent years. In FY 2022-23, the actual transmission loss was 3.31%, which was reduced as compared to the previous year. The table below highlights the actual transmission loss achieved by AEGCL.

Table 6: Transmission Loss for FY 2022-23

S.N.	Particulars	Approved in T.O. dtd 21.03.2022	AEGCL Submission
1	Energy Injected (MU)		11452.47
2	Energy Sent Out to APDCL (MU)		10985.26
3	Energy Sent Out to OA Consumers (MU)		88.37
4	Total Energy Sent Out		11073.63
5	Transmission Loss (MU)		378.84
6	**Transmission Loss (%)**	**3.27%**	**3.31%**

3.3.2 The energy balance certified by SLDC is attached as **Annexure-II**. Hence, AEGCL requests the Hon'ble Commission to approve the Transmission loss of 3.31% for FY 2022-23.

3.3.3 AEGCL submits that the Energy Audit Report for FY 2022-23 is attached herewith as **Annexure-III.**

3.4 Fixed Cost for FY 2022-23

3.4.1 Based on the Capital Cost and the consequent Capitalized Expenditure, Equity Component and Normative Debt, the fixed cost of AEGCL for FY 2022-23 have been determined in accordance with the MYT Regulations, 2021 outlined thereof. The fixed cost for AEGCL has been determined under the following major heads:

- Operation and Maintenance Expenses
- Depreciation
- Interest and Finance Charges
- Interest on Working Capital
- Return on Equity
- Bulk Supply Tariff (BST)
- Contribution towards Contingency Reserve

Less:

- Non-Tariff Income

3.4.2 For the purpose of truing up, all the heads mentioned above have been categorized into Controllable or Uncontrollable factors. A head wise comparison has been made between the values approved by the Hon'ble Commission vide Tariff Order dated 21.03.2022 and the actual expenditure incurred by the AEGCL in FY 2022-23 based on the audited accounts along with the same applied as per the requirement.

3.5 Categorization of Heads of Expenses

3.5.1 As per provisions of MYT Regulations, 2021, all the expenditure heads need to be categorized into Controllable (under control of the Petitioner) and Uncontrollable (not under control of the Petitioner).

3.5.2 Regulations 11 of MYT Regulations, 2021, provide for categorization of expense heads. Based on the above classification, AEGCL has computed the Gains/ Losses attributed to such controllable & uncontrollable factors for FY 2022-23.

3.6 Operation and Maintenance Expenses for FY 2022-23

3.6.1 The Regulation 67.5 and 67.8 of the AERC (MYT) Regulations, 2021 specifies the normative Operation and Maintenance (O&M) expenses allowed for existing Transmission Licensee for the said control period. The relevant provision is as follows:

"67.6 Existing Transmission Licensee

…

67.6.3 The O&M expenses for the nth year and also for the year immediately preceding the Control Period shall be approved based on the formula given below:

O&Mn = R&Mn + EMPn + A&Gn
Where –
O&Mn – Operation and Maintenance expense for the nth year;
EMPn – Employee Costs for the nth year;
R&Mn – Repair and Maintenance Costs for the nth year;
A&Gn – Administrative and General Costs for the nth year;

67.6.4 The above components shall be computed in the manner specified below:
EMPn = (EMPn-1) x (1+Gn) x (CPI inflation)
R&Mn = K x (GFA n-1) x (WPI inflation) and
A&Gn = (A&Gn-1) x (WPI inflation) + Provision

Where -

- *EMPn-1 – Employee Costs for the (n-1)th year;*
- *A&G n-1 – Administrative and General Costs for the (n-1)th year;*
- *Provision: Cost for initiatives or other one-time expenses as proposed by the Distribution Licensee and validated by the Commission.*
- *'K' is a constant specified by the Commission in %. Value of K for each year of the control period shall be determined by the Commission in the MYT Tariff order based on licensee's filing, benchmarking of repair and maintenance expenses, approved repair and maintenance expenses vis-a-vis GFA approved by the Commission in past and any other factor considered appropriate by the Commission;*
- *CPI inflation – is the average increase in the Consumer Price Index (CPI) for immediately preceding three years;*
- *WPI inflation – is the average increase in the Wholesale Price Index (CPI) for immediately preceding three years;*
- *GFAn-1 --- Gross Fixed Asset of the transmission licensee for the n-1th year;*
- *Gn is a growth factor for the nth year. Value of Gn shall be determined by the Commission in the MYT tariff order for meeting the additional manpower requirement based on licensee's filings, benchmarking, and any other factor that the Commission feels appropriate.*

67.8 <u>O&M Sharing between two Transmission Licensees</u>

67.8.1 For such Transmission Licensees whose bays are installed in the premises of and maintained by another Transmission Licensee, the O&M expense for such

assets shall be allowed in accordance with the norms applicable for the Transmission Licensee who performs the O&M of such assets:

Provided that the Transmission Licensees shall mutually agree on sharing of such allowed O&M expenses:

Provided further that Transmission Licensees shall project addition of such assets over the Control Period separately in their Capital Investment Plan to be submitted in accordance with Regulation 6."

3.6.2 During FY 2022-23, based on methodology specified by the MYT Regulations, 2021, the Normative O&M expenses of AEGCL works out to be Rs. 219.87 crores which is inclusive of Employee cost, Repair & Maintenance charges, and Administration & General expenses. The following table provides the summary of Normative O&M Expenses for FY 2022-23.

Table 7: Operation and Maintenance Expenses for FY 2022-23

(Rs.Crs.)

S.N.	Particulars	Approved in T.O. dtd 21.03.2022	AEGCL Submission
	O&M Expenses	**223.11**	**219.05**
1	Employee Cost	184.39	185.39
2	R&M Expenses	28.89	22.99
3	A&G Expenses	9.83	10.67

3.6.3 WPI Inflation computation for FY 2022-23

3.6.3.1 The average increase in the Wholesale Price Index (WPI) for the preceding three years gives the WPI Inflation for FY 2022-23. Hence, the WPI Index from FY 2019-20 to FY 2021-22 is considered and the computation is provided in the table as follows:

Fiscal	WPI Index	YOY Change %
FY 2021-22	139.41	13.00%
FY 2020-21	123.37	1.29%
FY 2019-20	121.8	1.67%
Average WPI Inflation (Last 3 Years)		**5.32%**

3.6.4 WPI inflation for FY 2022-23 has been computed as an average increase of WPI index for period from FY 2019-20 to FY 2021-22 which works out to 5.32%.

3.6.5 CPI Inflation computation for FY 2022-23

3.6.6 The average increase in the Consumer Price Index (CPI) for the preceding three years gives the CPI Inflation for FY 2022-23. Hence the CPI Index from FY 2019-20 to FY 2021-22 is considered and the computation is provided in the table as follows:

Fiscal	CPI Index	YOY Change %
FY 2021-22	356.06	5.13%
FY 2020-21	338.69	5.02%
FY 2019-20	322.5	7.53%
Average CPI Inflation (Last 3 Years)		**5.89%**

3.6.7 CPI inflation for FY 2022-23 has been computed as the average increase of CPI index for period from FY 2019-20 to FY 2021-22 which works out to 5.89%.

3.6.8 **Normative Calculation of R&M expense for FY 2022-23**

3.6.8.1 Regulation 67.6.4 provides the manner in which components of O&M expenses shall be computed. The methodology for R&M expense is as follows:

R&Mn = K x (GFA n-1) x (WPIinflation)

Table 8: Normative Repairs and Maintenance Expenses for FY 2022-23

S. No	Particulars	Approved in T.O. dtd 21.03.2022	Amount (Rs. Cr.)
1	Opening GFA for previous year	2,557.77	2,557.99
2	Closing GFA for previous year	2,708.47	2,732.21
3	**Average GFA for previous year**	2,633.12	**2,645.10**
4	K Factor	0.75%	0.75%
5	WPI Inflation	4.13%	5.32%
6	Normative R&M Expense	**20.66**	**20.89**
7	Expenditure for Colony Maintenance of AEGCL	5.93	2.10
8	Provision for Emergency Restoration System (ERS) Towers	2.30	0.00
9	**Net Normative R&M Expense**	**28.89**	**22.99**

3.6.8.2 The "K" factor of AEGCL has been considered as 0.75% as approved by the Hon'ble Commission vide MYT Order dated 21.03.2022. The above normative R&M expenses are exclusive of SLDC expenses.

3.6.8.3 AEGCL has excluded the assets of SLDC from the opening and closing GFA of the previous year of AEGCL while computing normative R&M for FY 2022-23. R&M costs of SLDC have been individually accounted in the SLDC True up Petition for FY 2022-23. Also, the AMC cost of SCADA has been excluded from AEGCL and separately considered under SLDC petition.

3.6.9 **Provision for Colony Maintenance**

3.6.9.1 AEGCL had earlier prayed before the Hon'ble Commission to allot a separate coffer for improvement of its existing colonies associated with major Grid Substation. Needless to reiterate that the most of the residential buildings, interior roads, drains, security walls etc. needed major maintenance/ reconstruction. The Hon'ble commission vide tariff order dated 21.03.2023 approved Rs. 17.79 Cr to utilize specifically for colony maintenance to be spent through a duration of three financial years i.e., FY2022-23, 2023-24 and 2024-25. Accordingly, the yearly allowable amount of Rs. 5.93 Cr was meant to be utilized in FY 2022-23. AEGCL made all attempts to judiciously expend the amount by chalking out plans for works as here under

i) Repair of residential quarters
ii) Repair of colony roads
iii) Repair of Community Halls
iv) Beautification of colony landscape
v) Improvement of children playground etc.

3.6.9.2 The Hon'ble Commission will appreciate the fact that the preparation of detailed plan, estimate & scrutiny of the same entails a considerable period of time. Further no major civil works could be undertaken during the rainy season and majority of the work could be started after Oct/Nov. However, even after completion of the works a sizable amount could not be booked under expenditure account before 31st March'23, although booking of entire amount through administrative approval was almost completed under colony maintenance.

3.6.9.3 The amount against the work carried out in FY 2022-23 had to be booked against the FY 2023-24. AEGCL wants to complete the majority of the colony maintenance work by the end of the FY 2024-25. It is worth mentioning that a many of the GSS colonies including Sarusajai, Kahilipara, Dhaligaon, Depota, Samaguri, Mariani, Tinsukia Dullavcherra, Pailapool etc., there remains a lot of maintenance works to be undertaken in the coming months to repair & give a face lift to the colonies. Most respectfully AEGCL also submits that there has been surge of applicants (from employees) requesting residential quarters in AEGCL

colonies. This is due to ongoing repair and renovation exercise being carried out in AEGCL colonies. Under this circumstance, it is extremely important that AEGCL be allowed the entire amount of Rs. 17.79 Cr for FY 2024-25. AEGCL commits to fully utilize the balance amount within this stipulated period of MYT.

3.6.9.4 Further, detailed breakup against the work completed during the FY 2022-23 is herewith attached as **Annexure – IV**.

3.6.10 **Provision for Emergency Restoration System (ERS)**

3.6.10.1 AEGCL requested The Hon'ble Commission to allow Rs. 4.60 Cr for 4 (Four) nos. of ERS towers in the tariff petition for FY 2021-22. Earlier, AEGCL had procured ERS system from M/S Lindsey in the year 2007-2008. The system provided by Lindsey has been in the satisfactory use for the last several years. As such the estimate prepared was based on a quotation dated 10.02.2020.

3.6.10.2 The Hon'ble Commission granted Rs. 2.30 Crore vide tariff order dated 21.03.2022 for procurement of 2 (Two) nos. of ERS towers. Accordingly, AEGCL prepared an estimate for of 2 (Two) nos. of ERS towers based on the quotation received from M/s Lindsey dated 10.02.2020 with the price escalation @ 5% for 2 years (w.e.f. 2020 to 2022) amounting to Rs. 3.44 Crore. Based on this estimate, tender was floated on 03.02.2023 and finally price bid of the tender was opened on 28.04.2023. However, quoted price of the L1 bidder was found to be Rs. 6,04,16,000.00 (Six Crore Four Lakh Sixteen Thousand Only) including GST which is 75.58% higher than the estimated value.

3.6.10.3 AEGCL requested the L1 bidder for justification on the matter and as per the justification received from the L1 bidder stating that, due to the following reasons, the cost of ERS tower became very high

i) Due to the devaluation of INR against Dollar and
ii) Increase in the price of Aluminium in last 3 years @67% (It may be stated that majority of physical structures of ERS contains Aluminium and hence the rise in the prices of Aluminium results in the rise of cost of ERS System)

3.6.10.4 The matter was placed before Tender Purchasing Committee of AEGCL and as per TPC discussion, the tender was cancelled as the rate quoted by the L1 bidder exceeds the maximum allowable limit as per the AEGCL norms. However, due to fund constraint, AEGCL could not conduct further retendering process.

3.6.10.5 In view of the above, AEGCL requests the Hon'ble Commission to approve the normative R&M expenses as shown in above table amounting to Rs. 22.99 Crores for FY 2022-23.

3.6.11 Normative Calculation of Employee Expense for FY 2022-23

3.6.11.1 Regulation 67.6.4 provides the manner in which components of O&M expenses shall be computed. The methodology for Employee expense is as follows:

EMPn = (EMPn-1) x (1+Gn) x (CPIinflation)

Table 9: Normative Employee Expenses for FY 2022-23

S. N	Particulars	Approved in T.O. dtd 21.03.2022	Amount (Rs. Cr.)
1	Base Employee Cost (n-1)	173.00	173.34
2	Average CPI Rate for preceeding three years	5.53%	5.89%
3	Gn(Growth Factor for nth Year)	1.00%	1.00%
4	**Normative Employee Cost for FY 2022-23**	**184.39**	**185.39**

3.6.11.2 The Gn (Growth Factor) of AEGCL has been considered as 1.00% as approved by the Commission in the Tariff Order dated 21.03.2022. Base employee cost has been considered as approved by the Hon'ble Commission during the True Up for FY 2021-22 vide Tariff Order dated 29.03.2023 for APR of FY 2022-23. The above normative Employee Expenses are exclusive of SLDC Employee Expenses.

3.6.11.3 AEGCL requests the Hon'ble Commission to approve the normative Employee expenses as shown in above table amounting to Rs. 185.39 Cr for FY 2022-23.

3.6.12 Normative calculation of Administrative & General Expenses for FY 2022-23

3.6.12.1 Regulation 67.6.4 provides the manner in which components of O&M expenses shall be computed. The methodology for Administrative and General Expenses is as follows:

A&Gn = (A&Gn-1) x (WPIinflation) + Provision

Table 10: Normative A&G Expenses for FY 2022-23

S. No	Particulars	Approved in T.O. dtd 21.03.2022	Amount (Rs. Cr.)
1	A&G Expense for Previous year	9.44	10.13
2	WPI Inflation	4.13%	5.32%
3	**Normative A&G Expense for the year**	**9.83**	**10.67**

3.6.12.2 AEGCL requests the Hon'ble Commission to approve the normative A&G expenses as shown in above table amounting to Rs. 10.67 Crores for FY 2022-23.

3.6.12.3 The following sections provide the details of O&M expenses as provided in the Audited Accounts for FY 2022-23.

3.6.13 Repair and Maintenance Expenses for FY 2022-23

3.6.13.1 Repairs and Maintenance expenses go towards the day-to-day upkeep of the transmission network of the company and form an integral part of the company's efforts towards reliable and quality power transmission as also in reduction of losses in the system.

3.6.13.2 To maintain the assets in a more efficient way, AEGCL has been carrying out the repair and maintenance activities. The actual R&M expense for FY 2022-23 is mentioned below.

Table 11: Repair and Maintenance Expenses for FY 2022-23

Amount (Rs.Crs.)

S.N.	Particulars	AEGCL Submission
1	Plant & Machinery	7.97
2	Buildings	5.04
3	Civil works	0.99
4	Hydraulic Works	-
5	Lines, Cable Networks etc.	4.16
6	Vehicles	0.20
7	Furniture & Fixtures	0.11
8	Office Equipment	0.56
9	**Total**	**19.01**

3.6.14 Employee Expenses for FY 2022-23

3.6.14.1 Employee expenses comprise of salaries, dearness allowance, bonus, terminal benefits in the form of pension & gratuity funding, leave encashment and staff welfare expenses. The actual employee expenses for FY 2022-23 are as follows:

Table 12: Employee Expenses for FY 2022-23

(Rs.Crs.)

S.N	Particulars	Actual Employee Expenses
1	Salaries	96.03
2	Dearness Allowance (DA)	31.72

(Rs.Crs.)

S.N	Particulars	Actual Employee Expenses
3	Other Allowances & Relief	15.12
4	Honorarium/Overtime	0.12
5	Bonus/ Exgratia to Employees	0.36
6	Medical Expenses Reimbursement	0.21
7	Leave Travel Assistance	0.04
8	Earned Leave Encashment	2.51
9	Payment Under Workman's Compensation and Gratuity	8.02
10	Staff Welfare Expenses	0.20
11	Contribution to Terminal Benefits	20.60
12	**Total Employee Costs**	**174.93**

3.6.14.2 The details of manpower for FY 2022-23 excluding SLDC is provided in the table below:

Table 13: Manpower details for FY 2022-23

S.N.	Particulars	FY 2022-23
(A)	Manpower as on 1st April (Opening Balance)	1548
(B)	Retirement during the Financial Year	54
(C)	Recruitment during the Financial Year	0
(D)	Manpower as on 31st March (Closing balance)	1494

3.6.15 Administrative and General Expenses for FY 2022-23

3.6.15.1 Administrative expenses mainly comprise of rents, telephone and other communication expenses, professional charges, conveyance and traveling allowances, other debits. The actual Administrative and General expenses for the year FY 2022-23 is as follows:

Table 14: Administrative and General Expenses for FY 2022-23

(Rs.Crs.)

S.N	Particulars	Actual A&G Expenses
1	Lease/ Rent/Rates and taxes	0.50
2	Insurance	0.08
3	Telephone, Postage, Telegram & Telex Charges	0.14
4	Incentive & Award to Employees/Outsiders	0.31
5	Consultancy Charges	0.42
6	Other Professional Charges	0.77
7	Conveyance and travelling	1.40

(Rs.Crs.)

S.N	Particulars	Actual A&G Expenses
8	License and Registration Fees	0.02
9	Vehicle Expenses	4.82
10	Fee And Subscriptions Books and Periodicals	3.02
11	Printing And Stationery	0.47
12	Advertisement Expenses	0.46
13	Electricity Charges to Offices	0.53
14	Water Charges	0.00
15	Entertainment Charges	0.23
16	Miscellaneous Expenses	0.12
17	Legal Charges	0.15
18	Auditor's Fee	0.10
19	Freight On Capital Equipment	0.01
20	Purchase Related Advertisement Expenses	0.00
21	Vehicle Running Expenses Truck / Delivery Van	0.08
22	Other Freight	0.01
23	Fees including TA and DA for non-official member of Board	-
24	Fees for conducting recruitment & Other Departmental Examinations	0.01
25	Participation fees paid for Training/conference	0.00
26	Training of Staff and Officers	0.12
27	**Total A&G Expenses**	**13.78**

3.6.15.2 AEGCL submits that the A&G Expenses reflected in the Audited Annual Accounts for FY 2022-23 includes Self-insurance of Fixed Assets amounting to Rs. 3.03 crore under the head "Insurance" and donation to the Chief Minister's Relief Fund and other Socio-Cultural ceremonies amounting to Rs. 2.11 crore under the head "Contribution to Charities, etc.", which are not claimed under "A&G Expenses" in the True Up petition for FY 2022-23.

3.7 Sharing of Gains & Losses for FY 2022-23

3.7.1 Based on the methodology prescribed in the MYT Regulations 2021, AEGCL has classified various heads of expenses under Controllable & Uncontrollable factors. Regulation 10.2 of MYT Regulations, 2021 specifies O&M expenses (excluding terminal liabilities with regard to employees on account of changes in pay scales or dearness allowance due to inflation) as controllable factors. Also, the one-third of the amount of such gain shall be passed on as a rebate in tariff. The relevant extract from regulation 12 of MYT Regulations, 2021 is provided below for ready reference.

"12 Mechanism for pass through of gains or losses on account of Controllable items

12.1 The approved aggregate gain to the Generating Company or Transmission Licensee or Distribution Licensee or SLDC on account of controllable items shall be dealt with in the following manner:

a) One-third of the amount of such gain shall be passed on as a rebate in tariff over such period as may be stipulated in the Order of the Commission under Regulation 9.5;

b) The balance amount, which will amount to two-third of such gain, may be utilised at the discretion of the Generating Company or Transmission Licensee or Distribution Licensee or SLDC.

13.2 The approved aggregate loss to the Generating Company or Transmission Licensee or Distribution Licensee or SLDC on account of controllable items shall be dealt with in the following manner:

a) One-third of the amount of such loss may be passed on as an additional charge in tariff over such period as may be stipulated in the Order of the Commission; and

b) The balance amount of loss shall be absorbed by the Generating Company or Transmission Licensee or Distribution Licensee or SLDC."

3.7.2 Based on the above regulations, the sharing of gains or (losses) on account of O&M expenses is shown in the following Table.

Table 15: Sharing of Gains / (Losses) -O&M expenses for FY 2022-23

(Rs. Crores)

S N	Particulars	Actual	Normative	Gain/(Loss)	Gain/(Loss) to be shared with APDCL
		A	b	c=b-a	d=c x 1/3
1	Employee Cost	174.93	185.39	10.46	
2	Less: Terminal Liabilities	28.63	28.63	-	-
3	Employee Cost excl. Terminal Liabilities	146.30	156.76	10.46	3.49
4	Repair & Maintenance	19.01	22.99	3.99	1.33
5	Administrative & General Expenses	13.78	10.67	-3.11	-1.04
	Total (A)	**179.08**	**190.42**	**11.34**	**3.78**

3.7.3 In view of the above, AEGCL submits that normative O&M Expenses are higher than actual with respect to controllable factors, hence, the gain of Rs. 3.78 Crores shall be shared and passed on through ARR. Hence, AEGCL requests the Hon'ble Commission to approve the sharing of gain as shown in the above table.

3.8 Capital Expenditure and Capitalization for FY 2022-23

3.8.1 AEGCL submits that the Capital Expenditure and Capitalisation for FY 2022-23 has been computed based on Audit Annual Accounts. Funding has been considered based on the impact of conversion of Government Grants and Loans to Equity. The funding of Capitalisation excluding SLDC is shown in the following Table:

Table 16: Funding for Capitalisation for FY 2022-23

(Rs.Crs.)

S.N.	Particulars	Approved in T.O. dtd 21.03.2022	AEGCL Submission
1	Grant		168.12
2	Equity		113.23
3	Debt		8.51
4	**Total Capitalisation**	**200.00**	**289.87**

3.8.2 Scheme wise Capital Expenditure and Capitalization for FY 2022-23 is mentioned below:

S.N.	Scheme Name	FY 2022-23
		Actual Capital Expenditure
1	AIIB	156.19
2	ADB	4.68
3	NERPSIP	0.00
4	Annual Plan/SOPD	1.48
5	PSDF	16.01
6	TDF	1.86
7	Deposit work	0.00
8	NEC	0.00
9	AIFA	9.31
10	AIIMS	0.00
11	Internal Accrual Equity	2.87
	TOTAL	**192.40**

S.N.	Scheme Name	FY 2022-23
		Actual Capitalisation
1	AIIB	97.65
2	ADB	53.24
3	NERPSIP	0.00
4	Annual Plan/SOPD	8.51
5	PSDF	21.46
6	TDF	34.14

7	Deposit work	38.72
8	NEC	0.02
9	AIFA	0.00
10	AIIMS	22.52
11	Internal Accrual Equity	13.61
	TOTAL	**289.87**

3.8.3 Further, scheme wise detail capital expenditure & capitalization is provided in the Revised Capital Investment Plan as **Annexure-V**.

3.9 Gross Fixed Assets for FY 2022-23

3.9.1 The opening GFA for FY 2022-23 (excluding SLDC) as submitted by AEGCL is shown in the below table:

Table 17: Gross Fixed Assets for FY 2022-23

(Rs Crores)

SN	Particulars	Balance at the beginning of the year	Additions during the year	Retirement of assets during the year	Balance at the end of the year
1	Land owned under full ownership	44.98	2.68	-	47.66
2	Building	61.67	3.53	-	65.20
3	Hydraulic	2.64	-	-	2.64
4	Other Civil Works	131.26	28.73	-	159.98
5	Plant & Machinery	1,314.68	111.95	-	1,426.63
6	Lines & Cable Network	1,159.03	141.43	-	1,300.46
7	Vehicles	4.95	-	-	4.95
8	Furniture & Fixtures	7.77	0.57	-	8.35
9	Office Equipment	5.23	0.97	-	6.21
	Total	**2,732.21**	**289.87**	**-**	**3,022.08**

3.9.2 AEGCL requests the Hon'ble Commission to approve the capitalization amounting to Rs. 289.87 Crores as shown in the above table for FY 2022-23.

3.10 Depreciation for FY 2022-23

3.10.1 AEGCL has converted Government Loan of Rs. 638.41 Crore and Govt. Grant of Rs. 1955.05 Crore as on 31.03.2021 into Equity in FY 2022-23, as approved by the Hon'ble Cabinet, GoA, notified vide letter No. PEL.58/2021/pt./105 dated 03.02.2022. Letters in respect of conversion of Government Loans & Grants to equity are attached as **Annexure-VI**.

3.10.2 For FY 2022-23, the Government Grants is considered as Rs. 1951.14 crores and Loans of Rs. 638.41 crores converted to equity by GoA for AEGCL, as the Government Grant of Rs. 3.91 Crore which has been converted to equity is separately considered for SLDC (pertaining to SLDC), the depreciation for FY 2022-23 is calculated in the table below:

Table 18: Depreciation for FY 2022-23

(Rs.Crs.)

S.N.	Particulars	Depreciation Rate	Accumulated depreciation - beginning of the year	Additions during the year	Accumulated depreciation -at the end of the year
1	Land owned under full ownership	0.00%	-	-	-
2	Land under lease	3.34%	0.06	0.01	0.07
3	Building	3.34%	25.61	2.48	28.09
4	Hydraulic	5.28%	2.51	-	2.51
5	Other Civil Works	3.34%	23.01	9.52	32.53
6	Plant & Machinery	5.28%	623.71	81.24	704.95
7	Lines & Cable Network	5.28%	824.40	67.54	891.95
8	Vehicles	9.50%	4.45	-	4.45
9	Furniture & Fixtures	6.33%	4.39	0.46	4.85
10	Office Equipment	6.33%	3.75	0.66	4.41
11	**Total**		**1,511.90**	**161.92**	**1,673.82**
(a)	Gross Fixed Assets (a)				2,732.21
(b)	Gross Fixed Assets excluding Land (b)				2,684.55
(c)	Conversion of Grant to Equity				1,951.14
(d)	Opening CWIP (c)				904.13
(e)	Grant (CWIP + Assets) (d)				509.79
(f)	Grant towards GFA (e=d*b/(b+c))				381.36
12	Total Depreciation				161.92
13	Less: Dep towards assets through Grant/Consumer contribution				23.00
14	**Depreciation for the year (excl assets funded through grant and consumer contribution)**				**138.92**

3.10.3 AEGCL requests the Hon'ble Commission to approve the proposed depreciation amounting to Rs. 138.92 Cr. for FY 2022-23 excluding the depreciation of assets through grant during the same financial year.

3.11 Interest and Finance Charges for FY 2022-23

3.11.1 The Hon'ble Commission vide Tariff Order dated 29.03.2023 has approved the net normative closing loan as Rs. 216.38 Crores for FY 2021-22 and the same has

been considered as net normative opening loan for FY 2022-23. Addition of normative loan and repayment during the year was computed as Rs. 8.51 Crores and Rs. 138.92 Crores respectively. Also, the finance charges of Rs. 0.01 crore has been considered as bank commission/charges. Accordingly, Interest & Finance Charges arrived at Rs. 15.06 Crores.

Table 19: Normative Interest and Finance Charges for FY 2022-23

(Rs.Crs.)

Particulars	Approved in T.O. dtd 21.03.2022	AEGCL Submission
Net Normative Opening Loan	255.95	216.38
Addition of normative loan during the year	6.49	8.51
Normative Repayment during the year	35.96	138.92
Net Normative Closing Loan	**226.48**	**85.98**
Interest Rate	**10.08%**	**9.96%**
Interest Expenses on Loan	**24.31**	15.05
Finance Charges	0.01	0.01
Total Interest and Finance Charges	**24.32**	**15.06**

3.11.2 The actual Interest and Finance Charges based on the Audited Annual Accounts is mentioned below:

Table 20: Interest and Finance Charges for FY 2022-23

S. N	Particulars	AEGCL Submission
	Loan Details	
A	**Interest charges on State Govt. Loans, Bonds and Advances,**	
1	State Government Loans	0.88
2	ADB Loan	-
3	Central Government Loans	-
4	General Provident Fund	1.60
	Sub-total	**2.49**
B	**Interest on Long Term Loans/Credits from the FIs/banks/organisations approved by the State Govt.**	

	Secured Loans	-
	Unsecured Loans	-
C	**Other Interest & Finance Charges**	
	Cost of raising Finance/Bank Charges	0.01
	Penal Interest Charges	-
	Sub-total	**0.01**
D	**Grand Total of Interest & Finance Charges (A+B+C)**	**2.49**
E	Les : Interest & Finance Charges Capitalised	0.45
	Net Total of Interest Finance Charges (D-E)	**2.04**

S. N	**Particulars**	**FY 22-23 Actual**					
		Rate of Interest	**Opening Balance**	**Amount received**	**Principal repayment/ Conversion to Equity**	**Interest Due**	**Closing Balance**
	<u>Loan Details</u>						
A	**Interest charges on State Govt. Loans, Bonds and Advances,**						
1	State Government Loans	10%	551.52	3.61	542.73	0.88	12.40
2	ADB Loan	10.50%	95.68	0.0	95.68	-	0.00
3	Central Government Loans	-	-	-	-	-	0.00
4	General Provident Fund	7.10%	26.62	2.22	9.64	1.60	20.81
	Sub-total		**673.82**	**5.83**	**648.04**	**2.49**	**33.21**
	Interest on Long Term Loans/Credits from the FIs/banks/organisations approved by the State Govt.						

A	Secured Loans	-	-	-	-	0.00	0
B	Unsecured Loans	-	-	-	-	0.00	0
C	Other Interest & Finance Charges	-	-	-	-	-	0
	Cost of raising Finance/Bank Charges	-	-	-	-	0.01	0
	Penal Interest Charges	-		-	-		0
	Sub-total		**0.00**	**0.00**	**0.00**	**0.01**	**0.00**
D	**Grand Total of Interest & Finance Charges (A+B+C)**	-	**673.82**	**5.83**	**648.04**	**2.49**	**33.21**
E	Less: Interest & Finance Charges Capitalised	-	-	-	-	-	0
	Net Total of Interest Finance Charges (D-E)	-	**673.82**	**5.83**	**648.04**	**2.49**	**33.21**

3.11.3 AEGCL submits that based on the above computation, the interest rate arrived at 9.96% for FY 2022-23.

3.11.4 Therefore, AEGCL requests the Hon'ble Commission to approve the normative Interest & Finance Charges amounting to Rs. 15.06 Crore as mentioned for FY 2022-23.

3.12 Interest on Working Capital for FY 2022-23

3.12.1 AERC (MYT Regulations), 2021 provides for the interest on working capital. AEGCL computed the working capital based on the normative formula prescribed in the MYT Regulations, 2021.

3.12.2 The interest on working capital for FY 2022-23 computed by AEGCL against the approved interest on working capital by the Hon'ble Commission is shown below:

Table 21: Interest on Working Capital for FY 2022-23

S.N.	Particulars	Unit	Approved in T.O. dtd 21.03.2022	AEGCL Submission
1	O&M expenses for 1 month	Rs. Crs.	18.59	18.25
2	Maintenance spares @ 15% of O&M	Rs. Crs.	33.47	32.86
3	Receivables for two months	Rs. Crs.	70.94	101.54
4	**Total Working Capital**	**Rs. Crs.**	**123.00**	**152.65**

S.N.	Particulars	Unit	Approved in T.O. dtd 21.03.2022	AEGCL Submission
5	Rate of Interest	%	10.00%	10.86%
6	**Interest on Working Capital**	**Rs. Crs.**	**12.30**	**16.58**

3.13 Computation of rate of Interest on Working Capital

3.13.1 The interest rate of three hundred (300) basis points above the average State Bank of India MCLR (One Year Tenor) prevalent during the last one year arrived at 10.86%.

Table 22: MCLR rate for FY 2022-23 (last 1 year)

Effective Date	Interest Rate (%) (1Yr)
15-03-2023	8.50
15-02-2023	8.50
15-01-2023	8.40
15-12-2022	8.30
15-11-2022	8.05
15-10-2022	7.95
15-09-2022	7.70
15-08-2022	7.70
15-07-2022	7.50
15-06-2022	7.40
15-05-2022	7.20
15-04-2022	7.10
Average	**7.86%**

3.13.2 AEGCL requests the Hon'ble Commission to approve the proposed interest on working capital amounting to Rs. 16.58 Crore for FY 2022-23.

3.14 Return on Equity for FY 2022-23

3.14.1 As informed in section 3.10, AEGCL has converted Rs. 2593.46 crore to equity (i.e., Grant Rs. 1955.05 crore and Loans of Rs. 638.41 crore) as on 31.03.2022.

3.14.2 AEGCL submits that Rs. 2589.55 Crore has been converted to equity (i.e., Grant Rs. 1951.14 crore and Loans of Rs. 638.41 crore), since the Government Grant of Rs. 3.91 crores have been separately carried out for SLDC. Similarly, addition of equity during the year is considered at 30% of Rs. 2589.55 crore which arrived at Rs. 776.86 crore.

Table 23: Conversion of Govt. Grants & Loans to Equity

Particulars	As on 31.03.2021	Conversion to Equity during FY 2022-23	Total Loan	Total Equity	AEGCL Loan	AEGCL Equity	SLDC Loan	SLDC Equity
			70%	30%	70%	30%	70%	30%
Grant	1955.05	**1955.05**	**1368.54**	**586.52**	**1365.80**	**585.34**	**2.74**	**1.17**
Loan		**638.41**	**446.89**	**191.52**	446.89	191.52		
ADB Loan	95.68	95.68	66.98	28.70	66.98	28.70		
GoA Loan	542.73	542.73	379.91	162.82	379.91	162.82		
Total	**2593.46**	**2593.46**	**1815.42**	**778.04**	**1812.69**	**776.87**	**2.74**	**1.17**

3.14.3 In accordance with Regulation 34 of AERC (terms & conditions for determination of Multi Year Tariff) Regulations, 2021, Return on Equity shall be calculated at 13.50% and additional 1% for achieving 80% approved capitalization for previous year and 2% for achieving 100% approved capitalization for previous year.

3.14.4 It is pertinent to mention that the capitalisation achieved in FY 2022-23 is more than 100% against the approved capitalization by the Hon'ble Commission (Rs. 289.87 Crore capitalized against approved capitalisation of Rs 200 crore).

3.14.5 Therefore, the Return on Equity has been computed at 15.5% on closing balance of equity based upon the opening balance of equity and normative additions during the years. Return on Equity is computed as shown in the table below:

Table 24: Return on Equity for FY 2022-23

(Rs. Crore)

S.N	Particulars	Units	Approved in T.O. dtd 21.03.2022	AEGCL Submission
1	Equity (Opening Balance)	Rs. Crs.	99.93	99.93
2	Net additions during the year	Rs. Crs.	2.78	776.87
3	Less: Reduction during the year	Rs. Crs.	0	-
4	Equity (Closing Balance)	Rs. Crs.	102.71	876.80
5	**Average Equity**	**Rs. Crs.**	**101.32**	**488.36**
6	Rate of Return on Equity	%	13.50%	15.50%
7	**Return on Equity**	**Rs. Crs.**	**13.68**	**75.70**

3.14.6 AEGCL requests the Hon'ble Commission to approve the return on equity amounting to Rs. 75.70 Crores for the FY 2022-23 as proposed by AEGCL.

3.15 Bulk Supply Tariff (BST) – Terminal Benefits for FY 2022-23

3.15.1 AEGCL submits that the BST has been calculated as Rs. 0.20 per kwh of energy sent out to APDCL as certified by SLDC (Attached as **Annexure II**). The same is claimed for Pension Fund (special charges for Terminal Benefits.)

Table 25: Bulk Supply Tariff (BST) – Terminal Benefits for FY 2022-23

(Rs.Crs.)

S.N	Particulars	Approved in T.O. dtd 21.03.2022	AEGCL Submission
1	Energy Sent out to APDCL (MU)	214.38	11452.47
2	BST Charge (Rs. /kWh)		0.20
3	**Total (3=1*2/10)**	**214.38**	**219.71**

3.15.2 AEGCL requests the Hon'ble Commission to approve the special charges on BST accounting to Rs. 219.71 Crores as shown in above table.

3.16 Non-Tariff Income for FY 2022-23

3.16.1 The amount of Non-Tariff Income mostly comprises of income from investments, supervision charges and misc. receipts. The actual amount received during FY 2022-23 is considered under the truing up for FY 2022-23.

Table 26: Non-Tariff Income for FY 2022-23

(Rs.Crs.)

S.N.	Particulars	Approved in T.O. dtd 21.03.2022	AEGCL Submission
A	**Income from Investment, Fixed & Call Deposits**		
	Income from Investments	54.01	0.51
	Interest on fixed deposits		50.84
	Income on other investments (Dividend)		
	Interest from Banks		2.26
	Interest on GPF		-1.60
	Sub Total		**52.00**
B	**Other Non-Tariff Income**		
	Rental from contractors/others		0.66
	Inspection Bunglow/Guest house charges		0.03
	Electricity charges from employees		0.00
	Sale of tender forms		0.07
	Penalties recovered from suppliers/contractors		1.71
	Income from Supervision/Service charges on deposit works		21.55

(Rs.Crs.)

S.N.	Particulars	Approved in T.O. dtd 21.03.2022	AEGCL Submission
	Stale Cheque entry taken as income since not reissued		0.24
	Testing bills raised against testing of transformer, circuit breaker, etc.		0.42
	Reimbursement arrear bill raised against POSOCO for security guards enchanced monthly remuneration		0.10
	Income received from APGCL for repairing of transformer, etc.		0.20
	Hire Charges from Contractors/Suppliers/Others		0.02
	Sale of scrap		1.34
	Rentals from staff quarters		0.13
	Deposit forfeited		0.02
	Sub-Total		26.55
	Total	**54.01**	**78.50**

3.16.2 AEGCL requests the Hon'ble Commission to approve the Non-Tariff income amounting to Rs. 78.50 Crore as shown in above table.

3.16.3 In accordance with Regulation 68 of the MYT Regulations, 2021, AEGCL has not considered Dividend from NorthEast Transmission Company Limited (NETCL) for FY 2022-23.

"*Provided that the interest/dividend earned from investments made out of Return on Equity corresponding to the regulated business of the Transmission Licensee shall not be included in Non-Tariff Income.*"

3.17 Deduction of Interest on GPF from Non-Tariff Income

3.17.1 AEGCL has been utilizing GPF subscription from its employees as internal resources and the fund has been parked at different banks from which AEGCL has been earning interest. It has been shown as the other income in the profit and loss account of AEGCL which has been adjusted with the ARR at the time of filing the Tariff Petition.

3.17.2 Also, it is pertinent to mention that the Hon'ble Commission vide tariff order dated 21.03.2022 has approved deduction of interest on GPF from Non-Tariff Income.

3.17.3 Therefore, AEGCL prays to the Hon'ble Commission to allow the interest on GPF amounting to Rs. 1.60 Crores for FY 2022-23 by deducting the same from Non-Tariff Income.

3.18 Open Access Consumer's Wheeling charges

3.18.1 The Hon'ble Commission vide tariff order dated 21.03.2022 has approved the wheeling charges from Open Access Consumers separately considered as additional revenue of AEGCL for the computation of Revenue Gap/(Surplus) in True-up of AEGCL for FY 2022-23.

3.18.2 Therefore, in view of the above, AEGCL has considered the wheeling charges from Open Access Consumers amounting to Rs. 4.20 Crores as additional revenue of AEGCL for computation of Revenue Gap/(Surplus) in True-up for FY 2022-23 and request the Hon'ble Commission to approve the same.

3.19 Incentive on higher Transmission Availability for FY 2022-23

3.19.1 AEGCL submits that regulation 66 of MYT Regulations 2021 provides the incentive for transmission utility. Based on the said regulation, AEGCL has claimed an amount of Rs. 3.38 Crore during FY 2022-23 as incentive for higher Transmission Availability. This had been calculated based on the actual monthly transmission availability data in which the transmission availability was higher than 98.50% (Normal Availability). Month wise computation of the Transmission Incentive for the FY 2022-23 is shown in the following table.

Table 27: Transmission Incentive for FY 2022-23

(Rs Crores)

Sl.No.	Month	Actual transmission availability (in %)	Incentive/(Disincentive) (in Rs. Crore)
1	April'22	99.06%	0.22
2	May'22	99.37%	0.35
3	June'22	99.43%	0.36
4	July,22	99.27%	0.31
5	August'22	98.84%	0.13
6	September'22	99.05%	0.21
7	October'22	99.33%	0.33
8	November'22	99.23%	0.28
9	December'22	99.32%	0.33
10	January'23	99.22%	0.29

(Rs Crores)

Sl.No.	Month	Actual transmission availability (in %)	Incentive/(Disincentive) (in Rs. Crore)
11	February'23	99.31%	0.29
12	March'23	99.15%	0.26
	Average Total	**99.21%**	**3.38**

3.19.2 AEGCL requests the Hon'ble Commission to approve the transmission incentive amounting to Rs. 3.38 crores for FY 2022-23 as shown in the above table. The details of the Transmission Availability Factor is attached as **Annexure-VII**.

3.20 Contribution to Contingency Reserve for 2022-23

3.20.1 In accordance with Regulation 67.9 of AERC (terms & conditions for determination of Multi Year Tariff) Regulations, 2021 stipulate the computation of contingency reserves is as follows:

"*67.9.1The Transmission Licensee may make an appropriation to the Contingency Reserve of a sum not exceeding 0.1 per cent of the gross fixed assets approved by the Commission at the beginning of the year, for each year, which shall be allowed in the calculation of aggregate revenue requirement:*
Provided that where the amount of such Contingency Reserve exceeds one (1) per cent of the gross fixed assets, no such appropriation shall be allowed, which would have the effect of increasing the reserve beyond the said maximum:

Provided further that the amount so appropriated may be invested in securities and fixed deposit. Interest earned shall be added to the Contingency Reserve.

Provided also that the Transmission Licensee shall maintain separate account for such reserve.

67.9.2 The Contingency Reserve shall not be drawn upon during the term of the licence except to meet such charges as may be approved by the Commission as being the expenses arising out of accidents, natural calamities or circumstances beyond the control of the Licensee;

Provided that such drawal from Contingency Reserve shall be computed after making due adjustments for any other compensation that may have been received by the Licensee as part of an insurance cover and Government Grant, if any."

3.20.2 Considering 0.10% of the gross fixed assets (GFA) approved by the Hon'ble Commission at the beginning of the year i.e., as on 01.04.2022 subject to the limit of 1% of GFA and as per Regulation No. 67.9 of AERC MYT Regulations, 2021,

such expenses has been incurred for incident arising out of accidents, natural calamities or circumstances beyond the control of the Licensee.

3.20.3 The Hon'ble Commission vide its Tariff Order dated 21.03.2022 has approved Rs. 2.71 crores for FY 2022-23. The fund created under contingency reserves for FY 2022-23 was utilized for repairing of damaged and rusted tower legs, stubs, emergency replacement of damaged conductor, temporary protection of tower, replacement of insulator due to fault, re-tensioning of conductors, construction of new towers in place of river eroded towers etc., in several transmission lines due to recent floods in the State. However, the contingency reserve based on actual GFA for FY 2022-23 arrived at Rs. 2.73 crore.

3.20.4 AEGCL humbly prays before the Hon'ble Commission to continue the "Contingency Reserves" as a number of towers either collapse or become vulnerable to collapse during the monsoon period particularly in the north bank due to storm or turbulent flow of flood water.

Table 28: Contingency Reserve for FY 2022-23

(Rs. Crore)

S. No.	Particulars	As per T.O dated 21.03.2022	AEGCL Submission
1	Opening GFA for Previous year	2708	2,732.21
2	% Factor	0.10%	0.10%
3	**Contingency Reserves (1*2)**	**2.71**	**2.73**

3.21 Truing Up for FY 2022-23 after Sharing of Gains & Losses for FY 2022-23

3.21.1 AEGCL submits that based on the above sections, total ARR for FY 2022-23 is mentioned below:

Table 29: Truing Up for FY 2022-23

(Rs. Crs.)

S.N.	Particulars	Approved in T.O. dtd. 21.03.2022	AEGCL Submission
1	O&M Expenses	223.11	219.05
a	Employee Cost	184.39	185.39
b	R&M Expenses	28.89	22.99
c	A&G Expenses	9.83	10.67
2	Depreciation	35.96	138.92
3	Interest & Finance Charges	24.32	15.06
4	Interest on Working Capital	12.30	16.58
5	BST for Pension Trust Fund	214.38	219.71
6	Return on Equity	13.68	75.70
7	Contribution to Contingency Reserve	2.71	2.73

(Rs. Crs.)

S.N.	Particulars	Approved in T.O. dtd. 21.03.2022	AEGCL Submission
8	Less: Non-Tariff Income/ Other Income	54.01	78.50
9	**Aggregate Revenue Requirement**	**472.45**	**609.24**
10	Add: Incentive on higher transmission availability	-	3.38
11	Add: Sharing of (Gains)/Loss	-	(3.78)
12	**ARR after Sharing Gains and Incentive**	**472.45**	**608.84**
13	Less: Revenue from STOA/MTOA Charges	12.00	4.25
14	**Net Aggregate Revenue Requirement**	**460.45**	**604.59**
15	**Revenue Gap for FY 2022-23**	**-**	**144.14**

3.21.2 The Hon'ble Commission is requested to approve the above ARR of Rs. 604.59 crore and allow AEGCL to pass on the revised revenue gap of Rs. 144.14 crores for FY 2022-23.

4 ANNUAL PERFORMANCE REVIEW OF FY 2023-24

4.1 Preamble

4.1.1 This section outlines the Annual Performance Review for FY 2023-24 whereby it highlights the performance of AEGCL for FY 2023-24 based on actuals of H1 and estimated of H2 for FY 2023-24.

4.1.2 As per the provisions of MYT Regulations, 2021, AEGCL hereby submits the Annual Performance Review for FY 2023-24 comparing actual performance during April'23 to September'23 (H1) and estimates for October'23 to March'24 (H2) of FY 2023-24 with approved figures for FY 2023-24 by Hon'ble Commission vide Tariff Order dated 29.03.2023. In addition, AEGCL wants to highlight that the GFA of SLDC has been segregated from AEGCL's GFA and is being filed separately under SLDC's Tariff Petition for FY 2023-24.

4.2 Transmission Loss for FY 2023-24

4.2.1 As stated in regulation 71 of AERC (Terms and Conditions for determination of Multi Year Tariff) Regulations, 2021, "The energy losses in the transmission system of the Transmission Licensee, as determined by the State Load Dispatch Centre and approved by the Commission, shall be borne by the Transmission System Users pro-rata to their usage of the intra-State transmission system.

"Provided that the Commission may stipulate a trajectory for reduction of transmission losses as a part of Multi Year Tariff framework applicable to the Transmission Licensee."

4.2.2 AEGCL submits that the transmission loss percentage has substantially come down from 3.31% (FY 2022-23) to estimated 3.28% in FY 2023-24. This signifies a loss reduction of 0.03% against the Hon'ble Commission's stipulation of 0.02% such an encouraging decrease in % Transformer loss become possible due to the following facts

i) With the commissioning of 132kV Hatsingmari GSS on 27.05.2023 there has been substantial improvement in voltage at the downstream distribution substation

ii) The commissioning of 132kV LILO from Pare-Nirjuli line at Nalkata GSS has increased the voltage profile at Nalkata 132kV Bus voltage profile at Nalkata 132kV Dhemaji &132kV Silapathar Bus. As a result of this 33kV downstream Distribution voltage has improved substantially at all DISCOM substations. Consequently, the Transmission Loss has come down at these areas.

iii) Many of the old 25MVA Transformers have been replaced at various Substations namely, Depota, Barnagar, Dibrugarh, Samaguri, Mirza, Moran Khaloigaon etc. Capacity Augmentation was carried out at 220kV Agia GSS by

addition of 160MVA Transformer. List of New Grid Element added to Assam Grid is enclosed herewith as **Annexure- VIII.**

iv) Some of the old Transmission lines such as 132kV Gauripur-Gosaigaon line, 132kV Salakati-Dhaligaon line and 220kV Sarusajai-Kukurmara line have been replaced with HTLS Conductors.

v) In the coming months, AEGCL expect to commission and load at 220kV Amingaon GSS, 132kV Nathkuchi GSS, 132kV Hajo GSS, 132kV Paltanbazar GIS and GMC GIS.

4.2.3 Hence, further improvement in Bus Voltage & accompanying reduction in Transmission Loss is expected. AEGCL expected to comply with the stipulated Transmission Loss trajectory in the coming years.

4.2.4 However, loss reduction is a slow process and becomes increasingly difficult as losses approach the technical threshold. The estimated transmission loss for FY 2023-24 based on actual half yearly results as shown below.

Table 30: Transmission Loss for FY 2023-24

S.N.	Particulars	Approved in T.O. dtd 21.03.2022	AEGCL Estimation
1	Energy Injected (MU)		13043.92
2	Energy Sent Out to APDCL (MU)		12577.42
3	Energy Sent Out to Inter State OA Consumers (MU)		27.46
4	Energy Sent Out to Intra State OA Consumers (MU)		10.87
5	Total Energy Sent Out		12615.75
6	Transmission Loss (MU)		428.17
7	**Transmission Loss (%)**	**3.25%**	**3.28%**

4.2.5 Further, the energy balance of 6 months actual and 6 months estimated of AEGCL, certified by SLDC is attached as **Annexure-IX**. As per table above, AEGCL requests the Hon'ble Commission to approve the Transmission loss of 3.28% for FY 2023-24.

4.3 Estimation of Expenses for the FY 2023-24

4.3.1 The components for the calculation of total expenses for FY2023-24 are as follow:

- Operation and Maintenance Expenses
- Depreciation
- Interest and Finance Charges
- Interest on Working Capital
- Return on Equity

- Bulk Supply Tariff (BST)
- Contribution towards Contingency Reserves

Less:

- Non-Tariff Income

4.4 Operation and Maintenance Expenses for FY 2023-24

4.4.1 The Regulation 67.5 and 67.8 of the AERC (MYT) Regulations, 2021 specifies the normative Operation and Maintenance (O&M) expenses allowed for existing Transmission Licensee for the said control period. The relevant provision is as follows:

"67.6Existing Transmission Licensee

…

67.6.3 The O&M expenses for the nth year and also for the year immediately preceding the Control Period shall be approved based on the formula given below:

O&Mn = R&Mn + EMPn + A&Gn
Where –
O&Mn – Operation and Maintenance expense for the nth year;
EMPn – Employee Costs for the nth year;
R&Mn – Repair and Maintenance Costs for the nth year;
A&Gn – Administrative and General Costs for the nth year;

67.6.4 The above components shall be computed in the manner specified below:
EMPn = (EMPn-1) x (1+Gn) x (CPI inflation)
R&Mn = K x (GFA n-1) x (WPI inflation) and
A&Gn = (A&Gn-1) x (WPI inflation) + Provision

Where -

- *EMPn-1 – Employee Costs for the (n-1)th year;*
- *A&G n-1 – Administrative and General Costs for the (n-1)th year;*
- *Provision: Cost for initiatives or other one-time expenses as proposed by the Distribution Licensee and validated by the Commission.*
- *'K' is a constant specified by the Commission in %. Value of K for each year of the control period shall be determined by the Commission in the MYT Tariff order based on licensee's filing, benchmarking of repair and maintenance expenses, approved repair and maintenance expenses vis-a-vis GFA approved by the Commission in past and any other factor considered appropriate by the Commission;*
- *CPI inflation – is the average increase in the Consumer Price Index (CPI) for immediately preceding three years;*

- *WPI inflation – is the average increase in the Wholesale Price Index (CPI) for immediately preceding three years;*
- *GFAn-1 --- Gross Fixed Asset of the transmission licensee for the n-1th year;*
- *Gn is a growth factor for the nth year. Value of Gn shall be determined by the Commission in the MYT tariff order for meeting the additional manpower requirement based on licensee's filings, benchmarking, and any other factor that the Commission feels appropriate.*

67.8 O&M Sharing between two Transmission Licensees

67.8.1 For such Transmission Licensees whose bays are installed in the premises of and maintained by another Transmission Licensee, the O&M expense for such assets shall be allowed in accordance with the norms applicable for the Transmission Licensee who performs the O&M of such assets:

Provided that the Transmission Licensees shall mutually agree on sharing of such allowed O&M expenses:

Provided further that Transmission Licensees shall project addition of such assets over the Control Period separately in their Capital Investment Plan to be submitted in accordance with Regulation 6."

4.4.2 During FY 2023-24, based on methodology specified by the MYT Regulations, 2021, the Normative O&M expenses of AEGCL works out to be Rs. 239.05 Crores which is inclusive of Employee cost, Repair & Maintenance charges and Administration & General Expenses. The following table provides the summary of Normative O&M Expenses for FY 2023-24 excluding the O&M expenses of SLDC.

Table 31: Operation and Maintenance Expenses for FY 2023-24

(Rs.Crs.)

S.N.	Particulars	Approved in T.O. dtd 29.03.2023	AEGCL Submission
1	**O&M Expenses**	**239.07**	**239.97**
a	Employee Cost	196.94	197.36
b	R&M Expenses	30.60	31.10
c	A&G Expenses	11.53	11.51

4.4.3 **WPI Inflation computation for FY 2023-24**

4.4.3.1 The average increase in the Wholesale Price Index (WPI) for immediately preceding three years gives the WPI Inflation for FY 2023-24. Hence the WPI Index from FY 2020-21 to FY 2022-23 is considered for computation purpose.

Table 32: WPI Inflation Computation for FY 2023-24

Fiscal	WPI Index	YOY Change %
FY 2022-23	152.53	9.41%
FY 2021-22	139.41	13.00%
FY 2020-21	123.37	1.29%
Average WPI Inflation (Last 3 Years)		**7.90%**

4.4.3.2 WPI inflation for FY 2023-24 has been computed as an average increase of WPI index for period from FY 2020-21 to FY 2022-23 which works out to 7.90%.

4.4.4 CPI Inflation computation for FY 2023-24

4.4.4.1 The average increase in the Consumer Price Index (CPI) for immediately preceding three years gives the CPI Inflation for FY 2023-24. Hence the CPI Index from FY 2020-21 to FY 2022-23 is considered for computation purpose.

Table 33: CPI Inflation Computation for FY 2023-24

Fiscal	CPI Index	YOY Change %
FY 2022-23	377.62	6.06%
FY 2021-22	356.06	5.13%
FY 2020-21	338.69	5.02%
Average CPI Inflation (Last 3 Years)		**5.40%**

4.4.4.2 CPI inflation for FY 2023-24 has been computed as average increase of CPI index for period from FY 2020-21 to FY 2022-23 which works out to 5.40%.

4.4.5 Normative Calculation of R&M expense for FY 2023-24

4.4.5.1 Regulation 67.6.4 of AERC (MYT Regulations), 2021 provides the manner in which components of O&M expenses shall be computed. The methodology for R&M expense is as follows:

R&Mn = K x (GFA n-1) x (WPI inflation)

Table 34: Normative R&M expenses for FY 2023-24

S.No	Particulars	As per T.O. dated 29.03.2023	AEGCL Submission
1	Opening GFA for previous year	2731.97	2,732.21
2	Closing GFA for previous year	2893.06	3,022.08
3	Average GFA for previous year	2812.52	**2,877.14**
4	K Factor	0.75%	0.75%
5	WPI Inflation	8.02%	7.90%

6	**Normative R&M Expense**	**22.79**	**23.28**
7	**Expenditure for Colony Maintenance of AEGCL**	**5.93**	**5.93**
8	**Additional amount for Cyber Security**	**1.88**	**1.88**
9	**Total R&M Expenses**	**30.60**	**31.10**

4.4.5.2 The closing GFA for FY 2022-23 has been considered as opening GFA for FY 2023-24. The "K" factor of AEGCL has been considered as 0.75% as approved by the Hon'ble Commission in the Tariff Order dated 29.03.2023.

4.4.5.3 AEGCL has excluded the assets of SLDC from the opening and closing GFA of the previous year while computing normative R&M for FY 2023-24. The SCADA AMC cost is accounted in the SLDC Petition, which is not included in AEGCL's GFA for 2023-24.

4.4.6 Provision for Colony Maintenance of AEGCL

4.4.6.1 The Hon'ble Commission vide tariff order dated 21.03.2022 has approved amount of Rs. 5.93 Crores for FY 2023-24 for restoration of old colony buildings. AEGCL has already initiated the process and expenses of the same will be incurred during the current financial year.

4.4.7 Provision for Cyber Security of AEGCL

4.4.7.1 Cyber Security of Critical infrastructure in power sector organizations has become a matter of fundamental priority with respect to national defense strategy. Cyber Security is very important in increasing Cyber Security Awareness among the public and private sectors to enhance the overall cyber resilience of the nation. The Govt. Of India have also created NCIIPC (National Critical Information Infrastructure Protection Centre) under Sec 70A of the information Technology Act, 2000(amended 2008) as the Nodal Agency in respect of Critical information Infrastructure Protection. The NCIIPC has identified 6(six) sectors as Critical Information Infrastructure given below:

1. Transport
2. Power& Energy
3. Telecom
4. Government
5. Banking, Financial Services and Insurance
6. Strategic and Public Enterprises.

4.4.7.2 AEGCL comes under Power & Energy sector and hence considered as Critical Information Infrastructure by NCIIPC. A Central Coordinating agency,

Information Sharing and Analysis Centre (ISAC- Power) was established by MoP, Govt. of India under Central Electricity Authority (CEA) to share and analyze various cyber-Security incidents in the power sector. ISAC-Power is the common platform for the six Sectoral CERTs under MoP. It is very necessary for any organization to be very vigilant and always remain up-to date in matter of Cyber Security as now-a-days Cyber Attack in Many PSU's and Government organizations has been a very common phenomenon. As per directives of MoP, AEGCL have already designated a CISO to oversee the Cyber Security at the Organization.

4.4.7.3 Therefore, to cope with the existing Cyber Threats and remain updated various steps need to be undertaken which require financial involvement. Also, Cyber Security related issues cannot be taken lightly, and any data breach or attack may have disastrous impact for the organization and also be a breach in National Security. Further, it has been clearly mentioned in CEA (Cyber Security in Power Sector) Guidelines, 2021 under Article 1(j) that the responsible Entity shall allocate sufficient Annual budget for enhancing Cyber Security posture, enhanced year over year. In this regard, AEGCL requests the Hon'ble Commission to approve the amount towards Cyber Security as requested over and above the R&M expenses for FY 2023-24. The details of the expenses to incur towards cyber security are provided in **Annexure-X**.

4.4.7.4 The details of expenditure and amount booked for the 1st Half of the FY 2023-24 of the Cyber Security Budget are given below:

a) Payment Released:

i. Purchase of Webmail Licenses and Space

b) Amount booked and payment to be made:

i. Training And Development Cyber Hygiene training program at NPTI
ii. Observation of NCSAM Mock Drill by M/s Prime Infoserv LLP
iii. LAN (Local Area Network Connection) for AEGCL Offices
iv. LAN Connectivity set up at Transit Camp
v. End point Security Cloud Based (Antivirus)
vi. Procurement of Managed switches over unmanaged switches

4.4.7.5 The Details of expenditure to be done in the 2nd Half of the FY 2023-24 of the Cyber Security Budget are given below:

a) Managed Switches at AEGCL sites and AEGCL HQ:

i. This will act as a foundation to implement various govt. mandated advisories related to Cyber Security.

ii. Managed switches include remote management capabilities, allowing administrators to monitor and configure the switch from a central location.
iii. Managed switches often come with advanced security features, such as port security, which allows administrators to control which devices can connect to specific switch ports. This helps prevent unauthorized access to the network.

b) LAN (Local Area Network) Connections for AEGCL Offices:

i. It will strengthen the network architecture of AEGCL Offices to access hassle free internet Connectivity. A proper LAN is a pre requisite for various Cyber Security related Solutions.
ii. Facilitates communication and resource sharing within a confined AEGCL Offices.

c) 2 Fire walls at High availability mode for the NMS (Network Management Systems) at LA Communication, AEGCL.

i. This will strengthen the cyber security aspects in the NMS environment.
ii. Firewalls play a crucial role within NMS environments by providing several advantages in terms of security, access control, and overall network protection.
iii. Firewalls enable administrators to define and enforce access control policies. By regulating the flow of traffic between network segments, they ensure that only authorized users and devices can access specific resources within the NMS.

d) Professional Windows licensed Desktops/ Systems.

i. Many of the PC's and Desktops in AEGCL offices are using obsolete software's /hardware's which make them prone cyber security threats. Therefore, replacement of obsolete and vulnerable desktops /systems are essential.
ii. Using licensed software ensures that a business is compliant with legal requirements and software licensing agreements. Failure to comply with licensing terms can lead to legal consequences, including fines and penalties.
iii. Licensed versions of Windows receive regular security updates and patches from Microsoft. This is crucial for protecting desktops and the overall network from vulnerabilities and emerging security threats.
iv. Licensed versions of Windows come with technical support from Microsoft. This support can be valuable in troubleshooting issues, resolving technical challenges, and ensuring the smooth operation of desktop systems.

e) 300 additional End Point security licenses are required.

i. As organizations grow and the number of devices increases, additional licenses are needed to scale up endpoint security coverage. This ensures that all devices, both existing and new, are protected against evolving cyber threats.
ii. Compliance standards and regulations may require organizations to implement specific security measures on all devices to protect sensitive data. Additional licenses may be necessary to meet these compliance requirements and avoid potential penalties.
iii. As the IT landscape evolves and the number of endpoints increases, having the appropriate number of licenses is crucial for maintaining a robust defense against cybersecurity threats.

4.4.7.6 Therefore, in view of the above, AEGCL requests the Hon'ble Commission to approve an amount of Rs. 31.10 Crores for Repair and Maintenance expenses including provision for Colony Maintenance and additional amount for Cyber Security of AEGCL for FY 2023-24.

4.4.8 Normative Calculation of Employee Expense for FY 2023-24

4.4.8.1 In accordance with Regulation 67.6.4 of AERC (MYT Regulations), 2021 provides the manner in which components of O&M expenses shall be computed. The methodology for employee expense is as follows:
EMPn = (EMPn-1) x (1+Gn) x (CPI inflation)

Table 35: Normative Employee Expense for FY 2023-24

S.No	Particulars	As per T.O. dated 29.03.2023	AEGCL Submission
1	Base Employee Cost (n-1)	185.39	185.39
2	CPI Inflation	5.18%	5.40%
3	Gn (Growth Factor for nth Year)	1.00%	1.00%
4	**Normative Employee Cost**	**196.94**	**197.36**

4.4.8.2 The normative employee cost for FY 2022-23 of AEGCL has been considered as base employee cost for FY 2023-24 after deducting the approved base employee cost of SLDC for previous year.

4.4.8.3 The Gn (Growth Factor) of AEGCL has been considered as 1.00% as approved by the Hon'ble Commission in the Tariff Order dated 29.03.2023.

4.4.8.4 AEGCL requests the Hon'ble Commission to approve the normative Employee expenses amounting to Rs. 197.36 Crores for FY 2023-24 as shown in the above table.

4.4.9 Normative Calculation of Administrative & General Expenses for FY 2022-23

4.4.9.1 In accordance with Regulation 67.6.4 of AERC (MYT Regulations), 2021provides the manner in which components of O&M expenses shall be computed. The methodology for Administrative and General Expenses is as follows:

A&Gn = (A&Gn-1) x (WPI inflation) + Provision

Table 36: Normative A&G expenses for FY 2023-24

S.No	Particulars	As per T.O. dated 29.03.2023	AEGCL Submission
1	A&G Expense for Previous year	10.67	10.67
2	WPI Inflation	8.02%	7.90%
3	**Normative A&G Expense for the year**	**11.53**	**11.51**

4.4.9.2 The normative A&G expense for FY 2022-23 of AEGCL has been considered as base A&G expense for FY 2023-24 and requests the Hon'ble Commission to approve the normative A&G expenses amounting to Rs. 11.51 crores for FY 2023-24 as shown in the above table.

4.4.9.3 In view of the above, AEGCL requests the Hon'ble Commission to approve the normative O&M expenses amounting to Rs. 239.97 crores as shown in the above tables for FY 2023-24.

4.4.9.4 Following Sections provide the details of O&M expenses as provided in the provisional half yearly statements and estimated for FY 2023-24.

4.4.10 Repair and Maintenance Expenses for FY 2023-24

4.4.10.1 While arriving R&M expenses for the FY 2022-23, actual R&M expenses incurred during first 6 months plus estimate for the next 6 months has been considered. It is pertinent to note that the R&M works of assets during the H1 is minimal on account of monsoon. Assam receives abundant rainfall in the monsoon. The rain season starts off with the month of June and lasts till October. Hence the R&M works are carried out post monsoon and hence H2 expenses are usually twice as the H1 expenses.

Table 37: Repair and Maintenance Expenses of FY 2023-24

(Rs. Crores)

S.N	Particulars	Approved in Order dtd 29.03.23	FY 2023-24 H1	FY 2023-24 H2	AEGCL Estimation
1	Plant & Machinery	30.60	2.72	5.43	8.15
2	Buildings		2.29	4.50	6.79
3	Civil works		0.57	2.87	3.44
4	Hydraulic Works		0.00	0.00	0.00
5	Lines, Cable Networks etc.		2.03	4.06	6.09
6	Vehicles		0.05	0.11	0.16
7	Furniture & Fixtures		0.09	0.18	0.27
8	Office Equipment		0.21	0.42	0.62
9	**Total**	**30.60**	**7.96**	**17.57**	**25.53**

4.4.11 Employee Expenses for FY 2023-24

4.4.11.1 Employee expenses include salaries, bonus, other benefits like medical expense reimbursement, LTA, etc. and terminal benefits in the form of pension, gratuity, leave encashment, staff welfare etc.

4.4.11.2 AEGCL submits that the employee costs for the FY 2023-24 have been estimated based on 6 months actual data and estimation for the next 6 months. Actual salary paid for the month of Oct 2023 has been considered as the salaries for the month of November 2023 to March, 2024.

Table 38: Employee Expenses of FY 2023-24

(Rs. Crores)

S.N	Particulars	Approved in Order dtd 29.03.23	FY 2023-24 H1	FY 2023-24 H2	AEGCL Estimation
1	Salaries	196.94	51.71	51.25	102.96
2	Dearness Allowance (DA)		18.81	19.32	38.13
3	Other Allowances & Relief		8.24	7.96	16.20
4	Honorarium/Overtime		0.02	0.02	0.03
5	Bonus/ Exgratia to Employees		0.00	0.36	0.37
6	Medical Expenses Reimbursement		0.17	0.11	0.28
7	Travelling Allowance (Conveyance Allowance)		0.00	0.00	0.00

(Rs. Crores)

S.N	Particulars	Approved in Order dtd 29.03.23	FY 2023-24 H1	FY 2023-24 H2	AEGCL Estimation
8	Leave Travel Assistance		0.02	0.02	0.04
9	Earned Leave Encashment		1.51	1.26	2.76
10	Payment Under Workman's Compensation and Gratuity		1.97	6.97	8.94
11	Staff Welfare Expenses		0.04	0.15	0.18
12	Contribution To Terminal Benefits		10.29	9.63	19.92
13	**Total Employee Costs**	**196.94**	**92.78**	**97.05**	**189.83**

4.4.11.3 The detail of the manpower of AEGCL excluding SLDC for FY 2023-24 is provided in the table below:

Table 39: Estimated Manpower details of AEGCL for FY 2023-24

S.N.	Particulars	Existing Manpower (H1)	Projection Manpower (H2)
(A)	Manpower as on 1st April (Opening Balance)	1494	1454
(B)	Retirement during the Financial Year	40	41
(C)	Recruitment during the Financial Year	0	109
(D)	Manpower as on 31st March (Closing balance)	1454	1512

4.4.12 Administrative and General Expenses for FY 2023-24

4.4.12.1 Administrative expenses include rents, telephone and other communication expenses, professional charges, conveyance and traveling allowances, etc. While arriving A&G expenses for the FY 2023-24, actual A&G expenses incurred during first 6 months plus estimate for the next 6 months has been considered. Estimated A&G Expense for FY 2023-24 is as shown below.

Table 40: Administrative and General Expenses for FY 2023-24

(Rs. Crores)

S.N	Particulars	Approved in Order dtd 29.03.23	FY 2023-24 H1	FY 2023-24 H2	AEGCL Estimation
1	Lease/ Rent/Rates and taxes	11.53	0.32	0.19	0.51

(Rs. Crores)

S.N	Particulars	Approved in Order dtd 29.03.23	FY 2023-24 H1	FY 2023-24 H2	AEGCL Estimation
2	Insurance		0.04	0.04	0.08
3	Telephone, Postage, Telegram & Telex Charges		0.07	0.08	0.15
4	Consultancy Charges		0.19	0.23	0.42
5	Other Professional Charges		0.38	0.39	0.77
6	Conveyance and travelling		0.79	1.17	1.96
7	License and Registration Fees		0.00	0.03	0.03
8	Vehicle Expenses		2.53	2.45	4.98
9	Fee And Subscriptions Books and Periodicals		1.25	2.00	3.25
10	Printing And Stationery		0.17	0.33	0.50
11	Advertisement Expenses		0.14	0.31	0.45
12	Contributions/Donations to Outside Institutes / Associations			0.00	0.00
13	Electricity Charges to Offices		0.29	0.23	0.52
14	Water Charges		0.01	0.00	0.01
15	Entertainment Charges		0.08	0.17	0.25
16	Miscellaneous Expenses		0.34	0.13	0.47
17	Legal Charges		0.18	0.10	0.28
18	Auditor's Fee		0.06	0.06	0.12
19	Freight On Capital Equipments		0.01	0.00	0.01
20	Vehicle Running Expenses Truck / Delivery Van		0.04	0.04	0.08
21	Other Freight		0.00	0.00	0.00
22	Fees including TA and DA for non-official member of the Board		0.26	0.14	0.40
23	Fees for conducting recruitment & Other Departmental Examinations		0.00	0.02	0.02
24	Participation fees paid for training/conference		0.00	0.00	0.00
25	Training of Staff and Officers		0.00	0.09	0.09

(Rs. Crores)

S.N	Particulars	Approved in Order dtd 29.03.23	FY 2023-24 H1	FY 2023-24 H2	AEGCL Estimation
26	**Total A&G Expenses**	**11.53**	**7.15**	**8.20**	**15.35**

4.5 Capital Expenditure and Capitalisation for FY 2023-24

4.5.1 AEGCL submits that the Capitalisation for FY 2023-24 has been estimated based on 6 months actual addition of assets and estimation of asset addition for the next 6 months.

4.5.2 The estimated scheme wise Capital Expenditure for FY 2023-24 is shown below:

Table 41: Scheme wise Capital Expenditure for FY 2023-24

S N	Name of the Scheme	Total Capital Expenditure	Grant	Equity	Loan
1	AIIB	418.05	418.05		
2	ADB	2.00	2.00		
3	Annual Plan/SOPD	5.22			5.22
4	PSDF	17.15	17.15		
5	TDF	16.83	16.83		
6	Deposit Works	0.00	0.00		
7	AIFA	19.58	19.58		
8	AIIMS	6.94	6.94		
9	NESIDS	5.00	5.00		
10	Internal Accrual Equity	5.13		5.13	
11	PM Gati Shakti	3.31	3.31		
	Total	**499.21**	**488.9**	**5.13**	**5.22**

4.5.3 Further, the estimated scheme wise capitalization for FY 2023-24 is shown below:

Table 42: Scheme wise Capitalisation for FY 2023-24

(Rs. Crore)

S N	Name of the Scheme	Total Capitalisation	Grant	Equity	Loan
1	AIIB	48.70	48.70		
2	ADB	33.53	33.53		
3	NERPSIP	689.76	689.76		
4	Annual Plan/SOPD	16.23			16.23
5	PSDF	19.48	19.48		
6	TDF	103.70	103.70		

S N	Name of the Scheme	Total Capitalisation	Grant	Equity	Loan
7	Deposit Works	38.78	38.78		
8	AIFA	46.43	46.43		
9	AIIMS	3.94	3.94		
10	Internal Accrual Equity	9.07		9.07	
	Total	**1009.62**	**984.31**	**9.07**	**16.23**

4.5.4 AEGCL requests the Hon'ble Commission to approve the proposed Capitalisation of Rs.1,009.62 Cr. for FY 2023-24.

4.5.5 Also, the funding of Capital Expenditure for FY 2023-24 is envisaged through Grants, Equity and Debt considering the impact of conversion of Government Grants and Loans to Equity.

4.5.6 The detailed breakup of funding of capitalization during FY 2023-24 are mentioned below:

Table 43: Capitalization for FY 2023-24 and its Funding

(Rs. Crores)

S.N	Particulars	Approved in T.O. dtd 29.03.2023	AEGCL Estimation
1	Grant	224.66	984.31
2	Equity		9.07
3	Debt	0.34	16.23
4	**Total Capitalisation**	**225.00**	**1,009.62**

4.6 Gross Fixed Assets for FY 2023-24

4.6.1 The opening GFA and addition of GFA for FY 2023-24 as submitted by AEGCL is shown in the below table.

Table 44: Gross Fixed Assets for FY 2023-24

(Rs. Crores)

S. N	Particulars	Balance at the beginning of the year	Additions during the year	Retirement of assets during the year	Balance at the end of the year
1	Land owned under full ownership	47.66	-0.06	-	47.60
2	Building	65.20	6.31	-	71.50
3	Hydraulic	2.64	-	-	2.64
4	Other Civil Works	159.98	14.08	-	174.06
5	Plant & Machinery	1,426.63	264.09	-	1,690.72
6	Lines & Cable Network	1,300.46	722.76	-	2,023.23
7	Vehicles	4.95	-	-	4.95

(Rs. Crores)

S. N	Particulars	Balance at the beginning of the year	Additions during the year	Retirement of assets during the year	Balance at the end of the year
8	Furniture & Fixtures	8.35	1.39	-	9.74
9	Office Equipment	6.21	1.05	-	7.26
	Total	**3,022.08**	**1,009.62**	**-**	**4,031.70**

4.7 Depreciation for FY 2023-24

4.7.1 Depreciation has been calculated considering the opening balance of assets in the beginning of the year and the capitalization as shown in the below table. AEGCL submits that the Depreciation is computed for assets excluding those funded through grant mechanism.

4.7.2 AEGCL has converted Government Loan of Rs. 11.52 Crore and Government Grant of Rs. 134.40 Crore as on 31.03.2023 into equity during FY 2023-24, as approved by the Hon'ble Cabinet, GoA, in its meeting held on 08.09.2023 notified vide letter No. E 377979/4 dated 15.09.2023.

4.7.3 For FY 2023-24, after considering the Government Grants of Rs. 1951.14 crores and Loans of Rs. 638.41 crores converted to equity by GoA for AEGCL, along with the conversion of Government Grant of Rs. 134.40 Crores and loan of Rs. 11.52 Crores into equity as mentioned in **Annexure-XI,** the depreciation for FY 2023-24 is calculated in the table below:

Table 45: Depreciation for FY 2023-24

(Rs.Crs.)

S.N.	Particulars	Depreciation Rate	Accumulated depreciation -beginning of the year	Additions during the year	Accumulated depreciation at the end of the year
1	Land owned under full ownership	0.00%	-	-	-
2	Land under lease	3.34%	0.07	-	0.07
3	Building	3.34%	28.09	2.49	30.58
4	Hydraulic	5.28%	2.51	0.06	2.57
5	Other Civil Works	3.34%	32.53	4.93	37.46
6	Plant & Machinery	5.28%	704.95	74.50	779.46
7	Lines & Cable Network	5.28%	891.95	73.99	965.94
8	Vehicles	9.50%	4.45	0.21	4.66
9	Furniture &	6.33%	4.85	0.50	5.35

(Rs.Crs.)

S.N.	Particulars	Depreciation Rate	Accumulated depreciation -beginning of the year	Additions during the year	Accumulated depreciation at the end of the year
	Fixtures				
10	Office Equipment	6.33%	4.41	0.62	5.03
11	**Total**		**1,673.82**	**157.30**	**1,831.12**
(a)	Gross Fixed Assets (a)				3,022.08
(b)	Gross Fixed Assets excluding Land (b)				2,974.48
(c)	Conversion of Grant to Equity				2,089.45
(d)	Opening CWIP (c)				833.60
(e)	Grant (CWIP + Assets) (d)				1,494.11
(f)	Grant towards GFA (e=d*b/(b+c))				1,167.04
12	Total Depreciation				157.30
13	Less: Dep towards assets through Grant/Consumer contribution				61.72
14	**Depreciation for the year (excl assets funded through grant and consumer contribution)**				**95.58**

4.7.4 AEGCL requests the Hon'ble Commission to approve the proposed depreciation amounting to Rs. 95.58 Cr. for FY 2023-24 excluding the depreciation of assets through grant during the same financial year.

4.8 Interest and Finance Charges for FY 2023-24

4.8.1 The Interest & Finance charges for FY 2023-24 have been calculated based on the net normative closing loan for FY 2022-23 as net normative opening loan for FY 2023-24. The addition of loan based on the capitalization and computed depreciation excluding grant and conversion of Government Loans of Rs. 638.41 crores to equity for AEGCL has been considered for calculation of interest and finance charge for FY 2023-24 is shown below:

Table 46: Normative Interest and Finance Charges for FY 2023-24

(Rs. Crores)

S.N	Particulars	Approved in T.O. dtd 29.03.2023	AEGCL Submission
1	Net Normative Opening Loan	159.58	85.98
2	Addition of normative loan during the year	0.34	16.23
3	Normative Repayment during the year	118.59	95.58
4	**Net Normative Closing Loan**	**41.33**	**6.62**
5	**Interest Rate**	**9.92%**	**8.60%**
6	**Interest Expenses on Loan**	**9.96**	**3.98**
7	Finance Charges	0.01	0.01

(Rs. Crores)

S.N	Particulars	Approved in T.O. dtd 29.03.2023	AEGCL Submission
8	**Total Interest and Finance Charges**	**9.97**	**3.99**

4.8.2 The estimated Interest and Finance charges based on 6 months provisional accounts and 6 months projection is mentioned below:

Table 47: Interest and Finance Charges for FY 2023-24

S. No.	Particulars	FY 23-24 (H1) Actual						
		Rate of Interest	Opening Balance	Amount received	Principal repayment	Converted to Equity	Interest Due	Closing Balance
	Loan Details							
A	**Interest charges on State Govt. Loans, Bonds And Advances,**							
1	State Government Loans	10%	12.40		0.88	11.52		
2	ADB Loan	10.50%						
3	Central Government Loans							
4	General Provident Fund	8.00%	20.81	0.89	3.14		1.43	19.99
	Sub-total		**33.21**	**0.89**	**4.02**		**1.43**	**19.99**
	Interest on Long Term Loans/Credits from the FIs/banks/organisations approved by the State Govt.							
A	Secured Loans							0
B	Unsecured Loans							0
C	Other Interest & Finance Charges							0
	Cost of raising Finance/Bank Charges							0
	Penal Interest Charges							0
	Sub-total		**0.00**	**0.00**	**0.00**		**0.00**	**0.00**
D	**Grand Total Of Interest & Finance Charges (A+B+C)**		**33.21**	**0.89**	**4.02**		**1.43**	**19.99**
E	Less: Interest & Finance							0

	Charges Capitalised							
	Net Total of Interest Finance Charges (D-E)		**33.21**	**0.89**	**4.02**		**1.43**	**19.99**

S. No.	Particulars	FY 23-24 (H2) Estimated						
		Rate of Interest	Opening Balance	Amount received	Principal repayment	Converted to Equity	Interest Due	Closing Balance
	Loan Details							
A	**Interest charges on State Govt. Loans, Bonds and Advances,**							
1	State Government Loans	10%		4.71				
2	ADB Loan	10.50%						
3	Central Government Loans							
4	General Provident Fund	8.00%	19.99	0.89	0.00			20.88
	Sub-total		**19.99**	**5.60**	**0.00**		**0.00**	**20.88**
	Interest on Long Term Loans/Credits from the FIs/banks/organisations approved by the State Govt.							
A	Secured Loans						0.00	0
B	Unsecured Loans						0.00	0
C	Other Interest & Finance Charges							0
	Cost of raising Finance/Bank Charges						0.01	0
	Penal Interest Charges							0
	Sub-total		**0.00**	**0.00**	**0.00**			**0.00**
D	**Grand Total of Interest & Finance Charges (A+B+C)**		**19.99**	**5.60**	**0.00**		**0.00**	**20.88**
E	Less: Interest & Finance Charges Capitalised							0
	Net Total of Interest Finance Charges (D-E)		**19.99**	**5.60**	**0.00**		**0.00**	**20.88**

S. No.	Particulars	FY 23-24 (Total) Estimated						
		Rate of Interest	Opening Balanc	Amount receive	Principal repayme	Converted to Equity	Interest Due	Closing Balance

			e	d	nt			
	Loan Details							
A	**Interest charges on State Govt. Loans, Bonds And Advances,**							
1	State Government Loans	10%	12.40	4.71	1		0.00	16.23
2	ADB Loan	10.50%	0.00	0.00	0		0.00	0.00
3	Central Government Loans		-	-	0		0.00	0.00
4	General Provident Fund	8.0%	40.80		3.14		1.43	37.66
	Sub-total		**53.20**	**4.71**	**4.02**		**1.43**	**53.89**
	Interest on Long Term Loans/Credits from the FIs/banks/organisations approved by the State Govt.							
A	Secured Loans						0.00	0
B	Unsecured Loans						0.00	0
C	Other Interest & Finance Charges						0.00	0
	Cost of raising Finance/Bank Charges						0.01	0
	Penal Interest Charges						0.00	0
	Sub-total		**0.00**	**0.00**	**0.00**		**0.01**	**0.00**
D	**Grand Total of Interest & Finance Charges (A+B+C)**		**53.20**	**6.49**	**4.02**		**1.43**	**53.89**
E	Less: Interest & Finance Charges Capitalised						0.00	0
	Net Total of Interest Finance Charges (D-E)		**53.20**	**6.49**	**4.02**		**1.43**	**53.89**

4.8.3 AEGCL submits that the based on above computation, the estimated interest rate arrived at 8.60% for FY 2023-24

4.8.4 Accordingly, AEGCL requests the Hon'ble Commission to approve the normative Interest & Finance Charge of Rs. 3.99 Crores shown in the above table.

4.9 Interest on Working Capital for FY 2023-24

4.9.1 The interest on working capital has been calculated based on the normative working formula in accordance with Regulation 37.2 of AERC, MYT Regulations, 2021.

4.9.2 Rate of interest on working capital has been considered equal to the normative interest rate of three hundred (300) basis points above the average State Bank of India MCLR (One Year Tenor) prevalent during the last available six months for the determination of tariff. Interest on working capital for FY 2023-24 has been computed as shown below.

Table 48: Interest on Working Capital for FY 2023-24

S.N.	Particulars	Units	Approved in T.O. dtd 29.03.2023	AEGCL Estimation
1	O&M expenses for 1 month	Rs. Crs.	19.92	20.00
2	Maintenance spares @ 15% of O&M	Rs. Crs.	35.86	36.00
3	Receivables for two months	Rs. Crs.	111.82	111.25
4	**Total Working Capital**	**Rs. Crs.**	**167.60**	**167.24**
5	Rate of Interest	%	10.58%	11.53%
6	**Interest on Working Capital**	**Rs. Crs.**	**17.73**	**19.29**

4.10 Computation of rate of Interest on Working Capital

4.10.1 The interest rate of three hundred (300) basis points above the average State Bank of India MCLR (One Year Tenor) prevalent during the last available six months arrived at 11.53%.

Table 49: MCLR rate for FY 2023-24 (last 6 months)

Effective Date	Interest Rate (%) (1Yr)
15-10-2023	8.55
15-09-2023	8.55
15-08-2023	8.55
15-07-2023	8.55
15-06-2023	8.50
15-05-2023	8.50
Average	**8.53%**

4.10.2 AEGCL requests the Hon'ble Commission to approve the proposed interest on working capital amounting to Rs. 19.29 Crore for FY 2023-24.

4.11 Return on Equity for FY 2023-24

4.11.1 In accordance with Regulation 34 of AERC (terms & conditions for determination of Multi Year Tariff) Regulations, 2021, Return on Equity is calculated at 13.50%.

4.11.2 AEGCL submits that the Rs. 2589.55 Crores has been converted to equity (i.e., Grant Rs. 1951.14 crore and Loans of Rs. 638.41 crore), since the Government Grant of Rs. 3.91 crores have been separately carried out for SLDC. Similarly, addition of equity during the year is considered at 30% of Rs. 2589.55 crore which arrived at Rs. 776.86 crore.

Table 50: Conversion of Govt. Grants & Loans to Equity

(Rs. Crore)

Particulars	As on 31.03.2021	Conversion to Equity during FY 2022-23	Total Loan	Total Equity	AEGCL Loan	AEGCL Equity	SLDC Loan	SLDC Equity
			70%	30%	70%	30%	70%	30%
Grant	1955.05	**1955.05**	**1368.54**	**586.52**	**1365.80**	**585.34**	**2.74**	**1.17**
Loan		**638.41**	**446.89**	**191.52**	446.89	191.52		
ADB Loan	95.68	95.68	66.98	28.70	66.98	28.70		
GoA Loan	542.73	542.73	379.91	162.82	379.91	162.82		
Total	**2593.46**	**2593.46**	**1815.42**	**778.04**	**1812.69**	**776.87**	**2.74**	**1.17**

4.11.3 The Return on Equity has been computed at 13.5% on closing balance of equity based upon the opening balance of equity and normative additions during the years. Return on Equity is computed as shown in the table below:

Table 51: Return on Equity for FY 2023-24

(Rs. Crore)

S.N	Particulars	Units	Approved in T.O. dtd 29.03.2023	AEGCL Estimation
1	Equity (Opening Balance)	Rs. Crs.	827.01	876.80
2	Net additions during the year	Rs. Crs.		43.77
3	Less: Reduction during the year	Rs. Crs.	0.00	-
4	**Equity (Closing Balance)**	**Rs. Crs.**	827.01	**920.57**
5	**Average Equity**	**Rs. Crs.**	**827.01**	**898.68**
6	Rate of Return on Equity	%	13.50%	13.50%
7	**Return on Equity**	**Rs. Crs.**	**111.65**	**121.32**

4.11.4 AEGCL submits that Computation of equity addition of Rs. 43.77 Crore during the year is mentioned below:

Table 52: Conversion of Govt. Loans and Grants into equity during FY 2023-24

Particulars	Amount of Conversion into Equity	Treatment as per Debt-Equity Ratio norms	
		Loan (70%)	Equity (30%)
Govt. Loan	11.52	8.06	3.46
Govt. Grant	134.40	94.08	40.32
Total	**145.92**	**102.14**	**43.77**

4.11.5 AEGCL has converted Government Loan of Rs. 11.52 crore and Government Grant of Rs. 134.40 crore as on 31.03.2023 into equity during FY 2023-24, as approved by the Hon'ble Cabinet, GoA, in its meeting held on 08.09.2023 notified vide letter no. E 377979/4 dated 15.09.2023.

4.11.6 AEGCL requests the Hon'ble Commission to approve the return on equity for the FY 2023-24 as proposed by AEGCL.

4.12 Bulk Supply Tariff (BST) – Terminal Benefits for FY 2023-24

4.12.1 AEGCL submits that the BST is calculated based on the BST rate of Rs. 0.20 per kWh as approved by the Hon'ble Commission vide order dated 21.03.2022 and the estimated energy sent out to APDCL for FY 2023-24.

Table 53: Special Charges –Bulk Supply Tariff (BST)for FY2023-24

(Rs.Crs.)

S.N.	Particulars	Approved in T.O. dtd 29.03.2023	AEGCL Estimation
1	Energy Sent out to APDCL (MUs)	11455.67	12577.42
2	BST Charge (Rs./kWh)	0.20	0.20
3	**Total (3=1*2/10)**	**230.34**	**251.55**

4.12.2 AEGCL requests the Hon'ble Commission to approve the proposed special charges on BST amounting to Rs. 251.55 Cr. for FY 2023-24.

4.13 Non-Tariff Income for FY 2023-24

4.13.1 The amount of Non-Tariff Income mostly comprises of income from investments and other misc. receipts, etc., The estimation of NTI for FY 2023-24 is tabulated in the table below.

Table 54: Non-Tariff Income for FY 2023-24

(Rs. Crore.)

S.N.	Particulars	Approved in T.O. dtd 29.03.2023	FY 2023-24 H1	FY 2023-24 H2	AEGCL Estimation
A	**Income from Investment, Fixed & Call Deposits**	58.45			
	Income from Investments		-	0.50	0.50
	Interest on fixed deposits		28.60	17.04	45.64
	Income on other investments (Dividend)		-	-	-
	Interest from Banks		1.52	0.30	1.82
	Interest on GPF		-1.43	-0.80	-2.23
	Sub Total		**28.68**	**17.04**	**45.72**
B	**Other Non-Tariff Income**				
	Rental from		0.05	0.05	0.10

(Rs. Crore.)

S.N.	Particulars	Approved in T.O. dtd 29.03.2023	FY 2023-24 H1	FY 2023-24 H2	AEGCL Estimation
	contractors/others				
	Inspection Bunglow/Guest house charges		0.02	0.02	0.04
	Electricity charges from employees		0.00	0.00	0.00
	Sale of tender forms		0.02	0.02	0.04
	Penalties recovered from suppliers/contractors		0.23	-	0.23
	Other Miscellaneous Receipt		0.60	-	0.60
C	Income from Supervision/Service charges on deposit works		17.42	3.00	20.42
	Hire Charges from Contractors/Suppliers/ Others		0.08	-	-
	Sub Total		**18.42**	**3.09**	**21.52**
	Total	**58.45**	**47.10**	**20.13**	**67.23**

4.13.2 **Income from other investment (Dividend)**– As per clause 68.1 of MYT Regulation 2021, "Provided that the interest/dividend earned from investments made out of Return on Equity corresponding to the regulated business of the Transmission Licensee shall not be included in Non-Tariff Income". Therefore, the interest/dividend earned from North East Transmission Company Limited (NETCL) by AEGCL has not been considered under NTI.

4.13.3 **Interest on GPF-** The GPF liability is payable to an employee only after completion of 25 years of qualifying services. The accumulation of GPF is utilized as internal resources by AEGCL. As such GPF is shown as unsecured loan and the interest payable on GPF has been computed at 7.10% per annum for FY 2023-24 amounting to Rs. 2.23 crore. Interest on GPF is deducted from NTI, Further AEGCL requests the Hon'ble Commission to approve the interest on GPF that has been deducted from NTI.

4.13.4 As mentioned in the true up section, interest on GPF and income from open access consumer has been deducted from Non-Tariff Income. Hence, AEGCL requests the Hon'ble Commission to approve the Non-Tariff Income amounting to Rs. 67.23 crores for FY 2023-24.

4.14 Open Access Consumer's wheeling charges

4.14.1 AEGCL has considered the wheeling charges from Open Access Consumers amounting to Rs. 1.03 Crores in the H1 of FY 2023-24 as additional revenue of AEGCL for computation of Revenue Gap/(Surplus) and open access charges of Rs. 3.55 crores have been considered for H2. AEGCL requests the Hon'ble Commission to approve Rs. 4.58 crore for FY 2023-24.

4.15 Contribution to Contingency Reserves for FY 2023-24

4.15.1 In accordance with Regulation 67.9 of AERC (terms & conditions for determination of Multi Year Tariff) Regulations, 2021 stipulate the computation of contingency reserves is as follows:

" *67.9.1The Transmission Licensee may make an appropriation to the Contingency Reserve of a sum not exceeding 0.1 per cent of the gross fixed assets approved by the Commission at the beginning of the year, for each year, which shall be allowed in the calculation of aggregate revenue requirement:*
Provided that where the amount of such Contingency Reserve exceeds one (1) per cent of the gross fixed assets, no such appropriation shall be allowed, which would have the effect of increasing the reserve beyond the said maximum:

Provided further that the amount so appropriated may be invested in securities and fixed deposit. Interest earned shall be added to the Contingency Reserve.

Provided also that the Transmission Licensee shall maintain separate account for such reserve.

67.9.2 The Contingency Reserve shall not be drawn upon during the term of the licence except to meet such charges as may be approved by the Commission as being the expenses arising out of accidents, natural calamities or circumstances beyond the control of the Licensee;

Provided that such drawal from Contingency Reserve shall be computed after making due adjustments for any other compensation that may have been received by the Licensee as part of an insurance cover and Government Grant, if any."

4.15.2 The Hon'ble Commission vide its Tariff Order dated 29.03.2023 has approved Rs. 2.89 crores. The fund created under contingency reserves for FY 2023-24 shall be utilized for repairing of damaged and rusted tower legs, stubs, emergency replacement of damaged conductor, temporary protection of tower, replacement of insulator due to fault, re-tensioning of conductors, construction of new towers in place of river eroded towers etc., in several transmission lines due to recent floods in the State. However, the contingency reserve based on estimated GFA for FY 2023-24 arrived at Rs. 3.02 crore.

Table 55: Contribution towards Contingency Reserves for FY 2023-24

(Rs. Crore)

S. No.	Particulars	As per T.O dated 29.03.2023	AEGCL Submission
1	Opening GFA for Previous year	2893.06	3,022.08
2	% Factor	0.10%	0.10%
3	**Contingency Reserves (1*2)**	**2.89**	**3.02**

4.15.3 AEGCL hereby requests the Hon'ble Commission to approve the same as shown in the above table for FY 2023-24.

4.16 Annual Performance Review for FY 2023-24

4.16.1 Based on the Annual Performance Review, AEGCL prays before the Hon'ble Commission to allow ARR as proposed below.

Table 56: Annual Performance Review for FY 2023-24

(Rs. Crs.)

S.N	Particulars	Approved in T.O. dtd 29.03.2023	FY 2023-24 H1	FY 2023-24 H2	AEGCL Estimation
1	O&M Expenses	239.07	119.98	119.98	239.97
a	Employee Cost	196.94	98.68	98.68	197.36
b	R&M Expenses	30.60	15.55	15.55	31.10
c	A&G Expenses	11.53	5.76	5.76	11.51
2	Depreciation	117.69	47.79	47.79	95.58
3	Interest & Finance Charges	9.97	2.00	2.00	3.99
4	Interest on Working Capital	17.73	9.64	9.64	19.29
5	BST for Pension Trust Fund	230.34	125.77	125.77	251.55
6	Return on Equity	111.65	60.66	60.66	121.32
7	Contribution towards Contingency Reserve	2.89	1.51	1.51	3.02
8	Less: Non-Tariff Income	58.45	47.10	20.13	67.23
9	**Aggregate Revenue Requirement**	**670.89**	**320.26**	**347.23**	**667.49**
10	Less: Revenue from STOA/MTOA Charges	12.00	1.03	3.55	4.58
11	**Net Aggregate Revenue Requirement**	**658.89**	**319.23**	**343.68**	**662.91**
12	**Revenue Gap for FY 2023-24**				**4.03**

4.16.2 In view of the above, AEGCL requests the Hon'ble Commission to approve the above Net Aggregate Revenue Requirement amounting to Rs. 662.91 Crore for FY 2023-24.

5 AGGREGATE REVENUE REQUIREMENT FOR FY 2024-25

5.1 Preamble

5.1.1 This section deals with the determination of Aggregate Revenue Requirement of AEGCL for FY 2024-25 based on the projections made for the current year and the actuals of previous years.

5.1.2 This Chapter deals with the determination of ARR and transmission tariff for FY 2024-25 in accordance with the provisions of MYT Regulations, 2021.

5.2 Aggregate Revenue Requirement for FY 2024-25

5.2.1 Aggregate Revenue Requirement shall comprise of following components:

- Operation and Maintenance Expenses
- Depreciation
- Interest and Finance Charges
- Interest on Working Capital
- Return on Equity
- Bulk Supply Tariff (BST)
- Contribution towards Contingency Reserves

Less

- Non-Tariff Income

5.3 Principles of ARR for FY 2024-25

5.3.1 It is essential that all the costs are allowed so as to ensure the financial viability of AEGCL. It requires generating adequate amount of profit from its operations so that it can maintain the system properly and simultaneously it can take up R&M projects to upgrade its transmission system. Also needs to incur capital expenditure to cater to the future needs of the system.

5.3.2 In the circumstances and conditions mentioned above, the Aggregate Revenue Requirement as proposed by AEGCL in this petition may be allowed.

5.4 Transmission Losses for FY 2024-25

5.4.1 As stated in regulation 72 of AERC (Terms and Conditions for determination of Multi Year Tariff) Regulations, 2021,

"*The energy losses in the transmission system of the Transmission Licensee, as determined by the State Load Despatch Centre and approved by the Commission,*

shall be borne by the Transmission System Users pro-rata to their usage of the intra-State transmission system:
Provided that the Commission may stipulate a trajectory for reduction of transmission losses in accordance with Regulation 7, as a part of Multi Year Tariff framework applicable to the Transmission Licensee.

AEGCL submits that many new 220kV substations are coming up under AIIB scheme which are expected to be charged only after FY 2024-25. Secondly, at APDCL end also majority of these voltage improvements at downstream levels are expected to be implemented by the end of FY 2024-25.

However, AEGCL will make all efforts towards improving the loss reduction process. In view of the above, the projected transmission losses for FY 2024-25 is as shown below:

Table 57: Transmission Losses for the FY 2024-25

S.No	Particulars	As per T.O. dated 21.03.2022	AEGCL Submission
1	Energy Injected (MU)	3.23%	13109.14
2	Energy Sent Out to APDCL (MU)		12640.31
3	Energy Sent Out to OA Consumers (MU)		38.71
4	Total Energy Sent Out		12679.02
4	Transmission Loss (MU)		430.12
5	**Transmission Loss (%)**	**3.23%**	**3.28%**

5.5 Transmission Availability for FY 2024-25

5.5.1 The projected Transmission availability factor is considered at 99.50% for the FY 2024-25

Table 58: Transmission Availability Factor for the FY 2024-25

S.No	Particulars	AEGCL Submission
1	Transmission Availability Factor	99.50%

5.6 Fixed Cost for FY 2024-25

5.6.1 Based on the Capital Cost and the consequent Capitalized Expenditure, Equity Component and Normative Debt, the fixed cost of AEGCL for FY 2024-25 have been determined in accordance with the MYT Regulations, 2021 outlined thereof. The fixed cost for AEGCL has been determined under the following major heads:

- Operation and Maintenance Expenses
- Depreciation
- Interest and Finance Charges
- Interest on Working Capital
- Return on Equity
- Bulk Supply Tariff (BST)
- Contribution towards Contingency Reserves

Less

- Non-Tariff Income

5.7 Operation and Maintenance Expenses for 2024-25

5.7.1 The Operation & Maintenance (O&M) expenses consists of Repair and Maintenance expenses, Employee expenses and Administration & General expenses. AEGCL highlights that the O&M charges of SLDC has been segregated and is filed separately under SLDC Tariff Petition for FY 2024-25. Regulation 67.5 & 67.8 of AERC (Terms and Conditions for determination of Multi Year Tariff) Regulations, 2021 provides for computation of O&M norms. The relevant provisions are reproduced below:

*"**67.6Existing Transmission Licensee***

…

67.6.3 The O&M expenses for the nth year and also for the year immediately preceding the ControlPeriod shall be approved based on the formula given below:-

O&Mn = R&Mn + EMPn + A&Gn
Where –
O&Mn – Operation and Maintenance expense for the nth year;
EMPn – Employee Costs for the nth year;
R&Mn – Repair and Maintenance Costs for the nth year;
A&Gn – Administrative and General Costs for the nth year;

67.6.4 The above components shall be computed in the manner specified below:
EMPn = (EMPn-1) x (1+Gn) x (CPIinflation)
R&Mn = K x (GFA n-1) x (WPIinflation) and
A&Gn = (A&Gn-1) x (WPIinflation) + Provision

Where –

- *EMPn-1 – Employee Costs for the (n-1)th year;*
- *A&G n-1 – Administrative and General Costs for the (n-1)th year;*
- *Provision: Cost for initiatives or other one-time expenses as proposed by the Distribution Licensee and validated by the Commission.*

- *'K' is a constant specified by the Commission in %. Value of K for each year of the control period shall be determined by the Commission in the MYT Tariff order based on licensee's filing, benchmarking of repair and maintenance expenses, approved repair and maintenance expenses vis-a-vis GFA approved by the Commission in past and any other factor considered appropriate by the Commission;*
- *CPIinflation – is the average increase in the Consumer Price Index (CPI) for immediately preceding three years;*
- *WPIinflation – is the average increase in the Wholesale Price Index (CPI) for immediately preceding three years;*
- *GFAn-1 --- Gross Fixed Asset of the transmission licensee for the n-1th year;*
- *Gn is a growth factor for the nth year. Value of Gn shall be determined by the Commission in the MYT tariff order for meeting the additional manpower requirement based on licensee's filings, benchmarking, and any other factor that the Commission feels appropriate.*

67.8 <u>O&M Sharing between two Transmission Licensees</u>

67.8.1 For such Transmission Licensees whose bays are installed in the premises of and maintained by another Transmission Licensee, the O&M expense for such assets shall be allowed in accordance with the norms applicable for the Transmission Licensee who performs the O&M of such assets:

Provided that the Transmission Licensees shall mutually agree on sharing of such allowed O&M expenses:

Provided further that Transmission Licensees shall project addition of such assets over the Control Period separately in their Capital Investment Plan to be submitted in accordance with Regulation 6."

5.7.2 During FY 2024-25, based on methodology specified by the MYT Regulations, 2021, the Normative O&M expenses of AEGCL works out to be Rs. 261.83 Crores which is inclusive of Employee cost, Repair & Maintenance charges and Administration & General Expenses. The following table provides the summary of Normative O&M Expenses for FY 2024-25 excluding the O&M expenses of SLDC.

Table 59: Operation and Maintenance Expenses for FY 2024-25

(Rs.Crs.)

S.N.	Particulars	Approved in T.O. dtd 21.03.2022	AEGCL Submission
1	**O&M Expenses**	**249.87**	**261.83**
a	Employee Cost	209.48	210.10

b	R&M Expenses	29.73	39.31
c	A&G Expenses	10.66	12.42

5.7.3 WPI Inflation computation for FY 2024-25

5.7.3.1 The average increase in the Wholesale Price Index (WPI) for the immediately preceding three years gives the WPI Inflation for the Base year. Since the WPI data is currently available till FY 2022-23, the Inflation factor could be computed till FY 2023-24. Hence the resulting WPI Inflation is considered for computational purpose of FY 2024-25 as follows:

Table 60 : WPI Inflation for FY 2024-25

Fiscal	WPI Index	YOY Change %
FY 2022-23	152.53	9.41%
FY 2021-22	139.41	13.00%
FY 2020-21	123.37	1.29%
Average WPI Inflation (Last 3 Years)		**7.90%**

5.7.4 CPI Inflation computation for FY 2024-25

5.7.4.1 The average increase in the Consumer Price Index (CPI) for the immediately preceding three years gives the CPI Inflation for base year. Since the CPI data is currently available till FY 2022-23, the Inflation factor could be computed till FY 2023-24. Hence, the resulting CPI Inflation is considered for computational purpose of FY 2024-25 as follows:

Table 61: CPI Inflation for FY 2024-25

Fiscal	CPI Index	YOY Change %
FY 2022-23	377.62	6.06%
FY 2021-22	356.06	5.13%
FY 2020-21	338.69	5.02%
Average CPI Inflation (Last 3 Years)		**5.40%**

5.7.5 Normative Calculation of R&M expense for FY 2024-25

5.7.5.1 Repair & maintenance expenses are directly related to number of the substations and lines, age of the assets, its wear and tear during the period. R&M expenses are generally incurred in order to ensure the maintenance of the transmission lines/systems.

5.7.5.2 Regulation 67.6.4 of AERC (MYT Regulations), 2021 provides the manner in which components of O&M expenses shall be computed. The methodology for R&M expense is as follows:

R&Mn = K x (GFA n-1) x (WPIinflation)

Table 62: Repair and Maintenance Expenses for 2024-25

(Rs. Crore)

S.No	Particulars	As per T.O. dated 21.03.2022	AEGCL Submission
1	Opening GFA for previous year	2908.47	3,022.08
2	Closing GFA for previous year	3158.47	4,031.70
3	Average GFA for previous year	3033.47	3,526.89
4	K Factor	0.75%	0.75%
5	WPI Inflation	4.13%	7.90%
6	**Normative R&M Expense**	**23.81**	**28.54**
7	**Provision for Colony Maintenance of AEGCL**	5.93	9.76
8	**Provision for Cyber Security**	**-**	1.01
9	**Total R&M Expenses**	**29.73**	**39.31**

5.7.5.3 The closing GFA for FY 2023-24 has been considered as opening GFA for FY 2024-25. The "K" factor of AEGCL has been considered as 0.75% as approved by the Hon'ble Commission in the Tariff Order dated 21.03.2022.

5.7.6 Provision for Colony Maintenance of AEGCL

5.7.6.1 AEGCL has prayed before the Hon'ble Commission to allot a separate coffer for improvement of its existing colonies associated with major Grid Substation. Needless to reiterate that the most of the residential buildings, interior roads, drains, security walls etc. needed major maintenance/ reconstruction. The Hon'ble commission vide tariff order dated 21.03.2023 approved Rs. 17.79 Cr to utilize specifically for colony maintenance through a duration of three financial years i.e., FY2022-23, 2023-24 and 2024-25. Accordingly, the yearly allowable amount of Rs.5.93 Cr was meant to be utilized in FY 2022-23. AEGCL made all attempts to judiciously expend the amount by choking out plans for works as here under

i) Repair of resident quarters
ii) Repair of colony roads
iii) Repair of Community Halls
iv) Beautification of colony landscape
v) Improvement of children playground etc.

5.7.6.2 Hon'ble Commission will appreciate the fact that the preparation of detailed plan, estimate & scrutiny of the same entails a considerable period of time. Further no major civil works could be undertaken during the rainy season and majority of the work could be started after Oct/Nov. However, even after completion of the works a sizable amount could not be booked under expenditure account before 31st March'23, although booking of entire amount through administrative approval was almost completed under colony maintenance.

5.7.6.3 The amount against the work carried out in FY 2022-23 had to be booked against the FY2023-24. AEGCL wants to complete the majority of the colony maintenance work by the end of the FY 2024-25. It is worth mentioning that a many of the GSS colonies including Sarusajai, Kahilipara, Dhaligaon, Depota, Samaguri, Mariani, Tinsukia Dullavcherra, Pailapool etc., there remains a lot of maintenance works coming months to repair & give a face lift to the colonies. Most respectfully AEGCL also submits that there has been surge of applicants (employees) requesting residential quarters in AEGCL colony. This is due to ongoing repair and renovation exercise being carried out in AEGCL colonies. Under this circumstance, it is extremely important that AEGCL shall be allowed the entire amount of Rs.17.79 Cr till FY2024-25. AEGCL hereby commits to fully utilize the balance amount with this stipulated period of MYT.

5.7.7 Provision for Cyber Security

5.7.7.1 End Point Security (EPS)

i. EPS stands for Endpoint Protection Security which refers to the security measures implemented to protect individual devices (endpoints) such as computers, laptops, and smartphones from security threats.
ii. EPS solutions help prevent a wide range of security threats, including malware, ransomware, and phishing attacks, from compromising individual devices.
iii. EPS safeguards sensitive data on endpoints, preventing unauthorized access or data breaches.
iv. Many EPS solutions offer centralized management, allowing administrators to monitor and control security settings on all endpoints from a central console.
v. EPS provides visibility into endpoint security status and generates reports on security events, aiding in proactive threat management and compliance.

5.7.7.2 Training and development regarding to Cyber Security

i. Training on cybersecurity awareness is critically important for individuals and organizations due to the increasing prevalence and sophistication of cyber threats.
ii. A significant number of cybersecurity incidents result from human error, such as clicking on phishing links or downloading malicious attachments. Training helps individuals recognize potential threats and adopt secure practices, reducing the risk of falling victim to cyber-attacks.
iii. Training instills a sense of responsibility for handling sensitive information securely. Employees learn the importance of safeguarding confidential data and understand the potential consequences of data breaches, identity theft, or corporate espionage.
iv. Cybersecurity awareness training helps organizations and individuals stay compliant with these regulations, avoiding legal consequences and financial penalties.
v. Establishing a culture of cybersecurity within an organization is essential. Training fosters a collective understanding of security best practices and creates an environment where everyone plays a role in protecting the organization's digital assets.
vi. Cybersecurity awareness training is crucial for building a resilient and security-conscious workforce, reducing the risk of cyber threats, and fostering a culture of proactive cybersecurity within organizations.

5.7.7.3 **NCSAM (National Cyber Security Awareness Month)**

i. Every year the month of October is observed as National Cyber Security Awareness Month.
ii. Cybersecurity awareness initiatives aim to educate individuals, businesses, and organizations about the importance of cybersecurity best practices, online safety, and the potential risks associated with cyber threats.
iii. Various Campaigns are organized by AEGCL during this month. These campaigns often include activities such as workshops, webinars, training sessions, and dissemination of informational materials etc.

5.7.7.4 **AEGCL Webmail licenses**

i. AEGCL uses its own official webmail services under the domain aegcl.co.in which needs to be subscribed annually.
ii. Using an official webmail service provided by a trusted and reputable organization offers several important benefits, particularly in terms of security, reliability, and professionalism.
iii. Official webmail services often use encryption protocols to secure the transmission of emails. This helps protect sensitive information from being intercepted or accessed by unauthorized parties.

iv. Using an official webmail service with a company's domain name (e.g. 123@aegcl.co.in) enhances professionalism and reinforces the organization's brand identity.

5.7.7.5 **Cyber Security Related Tools etc.**

i. Various Cyber Security related tools are required in-order to always remain ahead and updated in this cyber risk prone world.
ii. Availability of such tools keeps AEGCL ahead on the game and also makes AEGCL cyber resilience and more immune to cyber threats.
iii. Cybersecurity-related tools play a crucial role in safeguarding digital systems, networks, and data from a wide range of cyber threats.
iv. Such tools are essential for identifying vulnerabilities, detecting malicious activities, and implementing protective measures in the Company.

5.7.7.6 **Software Procurement**

i. Software procurement is a critical aspect of IT management for organizations, and its importance stems from several key factors like:
   a) Meeting business needs of the organization.
   b) Proper software procurement ensures that the acquired software aligns with the Organization's business objective and requirement.
   c) Right software streamlines business processes, enhances efficiency and boost productivity.
   d) Software procurement involves obtaining licenses for the software use thus ensuring compliance with the licensing agreements.

5.7.7.7 AEGCL submits that the required expenditure is mentioned below.

Table 63 : Provision for Cyber Security for FY 2024-25

Sl No	Description	Quantity	Unit	Rate in Rs.	Amount in Rs. Lakhs
1	End Point Security	1000	Nos	1,400	14,00,000
2	Training And Development				20,00,000
3	NCSAM (National Cyber Security Awareness Month)	1		2,00,000	2,00,000
4	AEGCL Webmail Licenses				15,00,000
5	Cyber Security Related Tools etc.				40,00,000
6	Software Procurement				10,00,000
Total					1,01,00,000

5.7.7.8 Therefore, in view of the above, AEGCL requests the Hon'ble Commission to approve an amount of Rs. 39.31 crores for Repair and Maintenance expenses including the provision for colony maintenance of AEGCL and Cyber Security for FY 2024-25 without any disallowance.

5.7.8 Normative Calculation of Employee expense for FY 2024-25

5.7.8.1 Regulation 67.6.4 of AERC (MYT Regulations), 2021 provides the manner in which components of O&M expenses shall be computed. The methodology for Employee expense is as follows:

EMPn = (EMPn-1) x (1+Gn) x (CPIinflation)

Table 64 : Employee Expenses for FY 2024-25

(Rs. Cr.)

S.No	Particulars	As per T.O. dated 21.03.2022	AEGCL Submission
1	Base Employee Cost (n-1)	196.54	197.36
2	CPI Inflation	5.53%	5.40%
3	Gn (Growth Factor for nth Year)	1.00%	1.00%
4	**Normative Employee Cost**	**209.48**	**210.10**

5.7.8.2 The base employee cost for FY 2024-25 has been computed considering the normative employee cost of FY 2023-24.

5.7.8.3 The detail of the manpower of AEGCL excluding SLDC for FY 2024-25 is provided in the table below:

Table 65: Projected Manpower details of FY 2024-25

S.N.	Particulars	Projection
(A)	Projected Manpower as on 1st April (Opening Balance)	1512
(B)	Retirement during the Financial Year	54
(C)	Projected Recruitment during the Financial Year	398
(D)	Projected Manpower as on 31st March (Closing balance)	1856

5.7.8.4 AEGCL humbly requests the Hon'ble Commission to approve the proposed employee expenses for FY 2024-25 without any disallowance.

5.7.9 Normative Calculation of Administrative and General Expenses for FY 2024-25

5.7.9.1 Regulation 67.6.4 of AERC (MYT Regulations), 2021 provides the manner in which components of O&M expenses shall be computed. The methodology for Administrative and General Expenses is as follows:

A&Gn = (A&Gn-1) x (WPIinflation) + Provision

Table 66 : Administrative & General Expenses for FY 2024-25

(Rs. Crore)

S.No	Particulars	As per T.O. dated 21.03.2022	AEGCL Submission
1	A&G Expense for Previous year	10.23	11.51
2	WPI Inflation	4.13%	7.90%
3	**Normative A&G Expense for the year**	**10.66**	**12.42**

5.7.9.2 Therefore, AEGCL requests the Hon'ble Commission to approve the A&G expenses for the FY 2024-25 amounting to Rs. 12.42 crore without any disallowance.

5.7.10 In view of the above, AEGCL requests the Hon'ble Commission to approve the normative O&M Expenses of Rs. 261.83 crore as shown in the above table.

5.8 Capital Expenditure and Capitalization for FY 2024-25

5.8.1 As per Regulation 6 of AERC (Terms and Conditions for determination of Multi Year Tariff) Regulations, 2021, AEGCL shall submit a Capital Investment Plan for FY 2024-25.

5.8.2 The scheme-wise capital expenditure along with funding pattern of AEGCL for FY 2024-25 and the details of capital expenditure and expenses capitalized are shown in **Annexure-V** titled "Revised Capital Investment Plan".

5.9 Funding of Capitalization for FY 2024-25

5.9.1 The funding of the above-mentioned capitalization is envisaged through various sources categorized under Equity, Grant, and Loan. The expenditure projected for FY 2024-25 is proposed to be funded through loan and grant as per funding patterns of the schemes. The detailed breakup of funding of capitalization during FY 2024-25 is proposed for the approval of the Hon'ble Commission as mentioned in the below table.

Table 67: Funding of Capitalisation for FY 2024-25

(Rs. Crore)

S.No	Particulars	As per T.O. dated 21.03.2022	AEGCL Submission
1	Grant	261.22	245.04
2	Equity	1.35	0.00
3	Debt	37.43	28.11
4	**Total Capitalisation**	**300.00**	**273.15**

5.10 Gross Fixed Assets for FY 2024-25

5.10.1 The opening GFA and addition of GFA for FY 2024-25 as submitted by AEGCL is shown in the below table

Table 68: Gross Fixed Assets for FY 2024-25

(Rs Crores)

SN	Particulars	Balance at the beginning of the year	Additions during the year	Retirement of assets during the year	Balance at the end of the year
1	Land owned under full ownership	47.60	-		47.60
2	Building	71.50	-		71.50
3	Hydraulic	2.64	-		2.64
4	Other Civil Works	174.06	20.71		194.77
5	Plant & Machinery	1,690.72	107.06		1,797.78
6	Lines & Cable Network	2,023.23	141.27		2,164.49
7	Vehicles	4.95	-		4.95
8	Furniture & Fixtures	9.74	0.80		10.54
9	Office Equipment	7.26	3.31		10.57
	Total	**4,031.70**	**273.15**	**-**	**4,304.85**

5.10.2 In view of the above, AEGCL requests the Hon'ble Commission to approve the capitalization as shown in the above table for FY 2024-25.

5.11 Depreciation for FY 2024-25

5.11.1 Depreciation has been computed as per AERC (terms & conditions for determination of Multi Year Tariff) Regulations, 2021 for FY 2024-25. Depreciation has been calculated taking into consideration the opening balance of assets in the beginning of the year and the provisional capitalization. The addition of assets for FY 2024-25 have been projected considering capital investment plan for FY 2024-25. The estimated closing Gross Block of Fixed Assets for the FY 2023-24 has been considered as the opening balance of assets in the beginning of the FY 2024-25.

5.11.2 As mentioned in para 3.10.1, AEGCL has converted Govt. Loan amounting to Rs. 638.41 Crore and Govt. Grant of Rs. 1955.05 Crore, as on 31.03.2021 into equity during FY 2022-23. Also, as mentioned in para 4.7.2, AEGCL has converted Govt. Loan amounting to Rs. 11.52 Crore and Govt. Grant of Rs. 134.40 Crore, as on 31.03.2023 into equity during FY 2023-24.

5.11.3 In accordance with Regulation 33 [(33.2) & (33.4)] of AERC (terms & conditions for determination of Multi Year Tariff) Regulations, 2021, depreciation is

calculated as per SLM considering depreciation on opening Fixed Asset to the extent of 90% of the Asset Value. Depreciation on the Assets added during the FYs has been calculated for 180 days assuming the date of commission of the Assets as the middle of the Financial Year. Depreciation has been provided at the rates specified in the AERC's Depreciation Rate Schedule. The depreciation of assets created through Grant has been reduced before arriving at net depreciation.

5.11.4 In addition, AEGCL highlights that the GFA of SLDC has been segregated from AEGCL's GFA. For FY 2024-25, after considering the Government Grants of Rs. 1951.14 crores and Loans of Rs. 638.41 crores converted to equity by GoA for AEGCL, along with the conversion of Government Grant of Rs. 134.40 Crores and loan of Rs. 11.52 Crores into equity as mentioned in **Annexure-X,** the depreciation for FY 2024-25 is calculated in the table below:

Table 69: Depreciation for FY 2024-25

(Rs.Crs.)

S.N.	Particulars	Depreciation Rate	Accumulated depreciation - beginning of the year	Additions during the year	Accumulated depreciation at the end of the year
1	Land owned under full ownership	0.00%	-		-
2	Land under lease	3.34%	0.07	-	0.07
3	Building	3.34%	30.58	2.39	32.97
4	Hydraulic	5.28%	2.57	-	2.57
5	Other Civil Works	3.34%	37.46	6.16	43.62
6	Plant & Machinery	5.28%	779.46	92.10	871.55
7	Lines & Cable Network	5.28%	965.94	110.56	1,076.49
8	Vehicles	9.50%	4.66	-	4.66
9	Furniture & Fixtures	6.33%	5.35	0.64	6.00
10	Office Equipment	6.33%	5.03	0.56	5.60
11	Any other assets	5.28%	-	-	-
	Total		**1,831.12**	**212.41**	**2,043.52**
(a)	Gross Fixed Assets (a)				4,031.70
(b)	Gross Fixed Assets excluding Land (b)				3,984.10
(c)	Conversion of Grant to Equity				2,089.45
(d)	Opening CWIP (c)				323.19
(e)	Grant (CWIP + Assets) (d)				1,739.15
(f)	Grant towards GFA (e=d*b/(b+c))				1,608.65
12	Gross Depreciation during the year				212.41
13	Less: Dep towards assets through Grant/Consumer contribution				85.76
14	**Depreciation for the year (excluding assets funded through Grant)**				**126.64**

5.11.5 AEGCL requests the Hon'ble Commission to approve the depreciation as requested in the table above for FY 2024-25.

5.12 Normative Interest and Finance Charges for FY 2024-25

5.12.1 The Interest & Finance charges for FY 2024-25 have been calculated based on the net normative closing loan for FY 2023-24 as net normative opening loan for FY 2024-25 is shown below:

Table 70 : Normative Interest & Finance Charges for FY 2024-25

(Rs.Crs.)

S.N	Particulars	As per T.O. dated 21.03.2022	AEGCL Submission
1	Net Normative Opening Loan	217.22	6.62
2	Addition of normative loan during the year	37.43	28.11
3	Normative Repayment during the year	39.47	126.64
4	**Net Normative Closing Loan**	**215.18**	**-**
5	**Interest Rate**	**10.08%**	**10.08%**
6	**Interest Expenses on Loan**	**21.78**	**0.33**
7	Finance Charges	0.01	0.01
8	**Total Interest and Finance Charges**	**21.79**	**0.34**

5.12.2 AEGCL requests the Hon'ble Commission to approve the normative Interest and Finance Charges of Rs. 0.34 crore as shown in the above table.

5.13 Interest on Working Capital for FY 2024-25

The interest on working capital has been calculated based on the normative working formula in accordance with Regulation 37.2 of AERC, MYT Regulations, 2021. The rate of interest provided on the working capital is the normative interest rate of three hundred (300) basis points above the average State Bank of India MCLR (one-year tenor) prevalent during last available six months for the determination of tariff. In line with norms, interest on working capital is calculated as shown below:

Table 71: Interest on working capital for FY 2024-25

(Rs. Crore)

S.N.	Particulars	Units	As per T.O. dated 21.03.2022	AEGCL Submission
1	O&M expenses for 1 month	Rs. Crs.	20.82	21.82
2	Maintenance spares @ 15% of O&M	Rs. Crs.	37.48	39.27
3	Receivables for two months	Rs. Crs.	90.03	120.61
4	**Total Working Capital**	**Rs. Crs.**	**148.33**	**181.71**
5	Rate of Interest	%	10.00%	11.53%

S.N.	Particulars	Units	As per T.O. dated 21.03.2022	AEGCL Submission
6	**Interest on Working Capital**	**Rs. Crs.**	**14.83**	**20.96**

5.14 Computation of rate of Interest on Working Capital

5.14.1 The interest rate of three hundred (300) basis points above the average State Bank of India MCLR (One Year Tenor) prevalent during the last available six months arrived at 11.53%.

Table 72: MCLR rate for FY 2023-24 (last 6 months)

Effective Date	Interest Rate (%) (1Yr)
15-10-2023	8.55
15-09-2023	8.55
15-08-2023	8.55
15-07-2023	8.55
15-06-2023	8.50
15-05-2023	8.50
Average	**8.53%**

5.14.2 AEGCL requests the Hon'ble Commission to approve the Interest on working capital of Rs. 20.96 crore as shown in the above table.

5.15 Return on Equity for FY 2024-25

5.15.1 AEGCL submits the ROE has been computed based on the details mentioned in section 4.12.

5.15.2 As specified in Regulation 34 of AERC (terms & conditions for determination of Multi Year Tariff) Regulations, 2021, Base Return on Equity is calculated at 13.50%.

Table 73: Return on Equity for FY 2024-25

(Rs. Crore)

S.N.	Particulars	As per T.O. dated 21.03.2022	AEGCL Submission
1	Equity (Opening Balance)	105.00	920.57
2	Net additions during the year	1.35	-
3	Equity (Closing Balance)	106.35	920.57
4	Average Equity	105.67	920.57
5	Rate of Return on Equity	13.50%	13.50%
6	**Return on Equity**	**14.27**	**124.28**

5.15.3 In view of the above, AEGCL requests the Hon'ble Commission to approve the Return on Equity of Rs. 124.28 crore for FY 2024-25.

5.16 Taxes for FY 2024-25

5.16.1 As per AERC (terms & conditions for determination of Multi Year Tariff) Regulations, 2021, Income Tax shall be reimbursed to the transmission licenses as per actual income tax paid, based on the documentary evidence submitted at the time of truing up of each year.

5.17 Bulk Supply Tariff (BST) – Terminal Benefits for FY 2024-25

5.17.1 Government of Assam (GoA) vide its Notification dated 4th February 2005 had entrusted the existing Pension Trust to be common trust for all the new companies till further orders of ASEB/GoA. Terminal benefits are defined as follows in Clause 1.5 of the aforementioned notification:

"ASEB's employee related liabilities, including payment of pension, gratuity, leave encashment and general provident fund and any other retirement benefits and other applicable benefits including the right to have the appropriate revisions in the above benefits consistent with the practice that were prevalent with the Board".

5.17.2 In view of the above, AEGCL humbly submits the special charges on account of Bulk Supply tariff has been computed considering the Bulk Supply Tariff at 20 paise per unit of energy sent out to APDCL as approved by the Hon'ble Commission vide order dated 21.03.2022. Accordingly, the Special Charges for FY 2024-25 are tabulated below:

Table 74: BST for FY 2024-25

(Rs. Crore)

S.N.	Particulars	As per T.O. dated 21.03.2022	FY 2024-25
1	Energy Sent Out to APDCL (MUs)		12640.31
2	BST Charge (Rs. /kWh)	250.79	0.20
3	**Total (3=1*2/10)**	**250.79**	**252.81**

5.17.3 AEGCL requests the Hon'ble Commission to consider the above charges amounting to Rs. 252.81 crore and approve it without any disallowance.

5.18 Non-Tariff Income for FY 2024-25

5.18.1 As per the AERC (terms & conditions for determination of Multi Year Tariff) Regulations, 2021, the amount of non-tariff income shall be deducted from the

aggregate revenue requirement in determining annual transmission charges of the Transmission Licensee.

5.18.2 The projected income in this category comprises of income from investments with Banks, miscellaneous receipts, etc., Year-wise details of Non-tariff Income are shown in the table below:

Table 75: Non-Tariff Income for 2024-25

(Rs. Crs.)

S.N.	Particulars	As per T.O. dated 21.03.2022	FY 2024-25
A	**Income from Investment, Fixed & Call Deposits**		
	Income from Investments		0.50
	Interest on fixed deposits		45.64
	Income on other investments (Dividend)		
	Interest from Banks		1.82
	Interest on GPF		-2.23
	Sub Total		**45.72**
B	**Other Non-Tariff Income**		
	Miscellaneous Receipts		21.48
	Penalty for contractor/supplier for delay, etc.		
	Rentals from staff quarters		
	Sub-Total		
C	**Total**	**54.01**	**67.20**

5.18.3 **Income from other investment (Dividend)** - As per clause 68.1 of MYT Regulation 2021, "Provided that the interest/dividend earned from investments made out of Return on Equity corresponding to the regulated business of the Transmission Licensee shall not be included in Non-Tariff Income". Therefore, the interest/dividend earned from NorthEast Transmission Company Limited (NETCL) by AEGCL has not been considered under NTI.

5.18.4 **Interest on GPF-** The GPF liability is payable to an employee only after completion of 25 years of qualifying services. The accumulation of GPF is utilized as internal resources by AEGCL. As such GPF is shown as unsecured loan and the interest payable on GPF has been computed at 7.10% per annum for FY 2024-25 amounting to Rs. 2.23 crore. Interest on GPF is deducted from NTI, Further AEGCL requests the Hon'ble Commission to approve the interest on GPF that has been deducted from NTI.

5.19 Income from Open Access Consumers for FY 2024-25

5.19.1 The Income from open access consumers has been projected based on actual of FY 2022-23 and six months actual for FY 2023-24. AEGCL hereby submits the projected income from open access consumers is considered same as estimated in previous year.

Table 76 : Income from Open Access for FY 2024-25

(Rs. Crore)

S.N.	Particulars	As per T.O. dated 21.03.2022	FY 2024-25
1	Income from OA Consumers	12.00	4.58
2	**Total**	**12.00**	**4.58**

5.20 Contribution to Contingency Reserves for FY 2024-25

5.20.1 In accordance with Regulation 67.9 of AERC (terms & conditions for determination of Multi Year Tariff) Regulations, 2021 stipulate the computation of contingency reserves is as follows:

"*67.9.1The Transmission Licensee may make an appropriation to the Contingency Reserve of a sum not exceeding 0.1 per cent of the gross fixed assets approved by the Commission at the beginning of the year, for each year, which shall be allowed in the calculation of aggregate revenue requirement:*

Provided that where the amount of such Contingency Reserve exceeds one (1) per cent of the gross fixed assets, no such appropriation shall be allowed, which would have the effect of increasing the reserve beyond the said maximum:

Provided further that the amount so appropriated may be invested in securities and fixed deposit. Interest earned shall be added to the Contingency Reserve.

Provided also that the Transmission Licensee shall maintain separate account for such reserve.

67.9.2 The Contingency Reserve shall not be drawn upon during the term of the licence except to meet such charges as may be approved by the Commission as being the expenses arising out of accidents, natural calamities or circumstances beyond the control of the Licensee;

Provided that such drawal from Contingency Reserve shall be computed after making due adjustments for any other compensation that may have been received by the Licensee as part of an insurance cover and Government Grant, if any."

5.20.2 The Hon'ble Commission has approved Rs. 2.91 crore for FY 2024-25 through its order dated 21.03.2022. The creation of contingency reserves for FY 2024-25 to coffer for protection of flood demised assets/ construction of new towers in

place of collapsed towers. As it is well known that the river basins of Assam in general and north bank river basins in particular bear a pattern which is totally different from other basin rivers in the country. Hence, contribution towards contingency reserves for FY 2024-25 is determined and provided below:

Table 77: Contribution towards Contingency Reserves for FY 2024-25

(Rs.Crs.)

S. N.	Particulars	As per T.O. dated 21.03.2022	FY 2024-25
1	Opening GFA for Previous year	2908.47	4,031.70
2	% Factor	0.1%	0.10%
3	**Contingency Reserves (1*2)**	**2.91**	**4.03**

5.20.3 AEGCL hereby requests the Hon'ble Commission to approve the same as shown in the above table for FY 2024-25.

5.21 Aggregate Revenue Requirement for FY 2024-25

5.21.1 Based on the category-wise expense as described above, the net Aggregate Revenue Requirement for FY 2024-25 of AEGCL is shown in the table below.

Table 78: Aggregate Revenue Requirement for FY 2024-25

(Rs.Crs.)

S. No.	Particulars	As per T.O. dated 21.03.2022	FY 2024-25
1	O&M Expenses	249.87	261.83
a	Employee Cost	209.48	210.10
b	R&M Expenses	29.73	39.31
c	A&G Expenses	10.66	12.42
2	Depreciation	39.47	126.64
3	Interest & Finance Charges	21.79	0.34
4	Interest on Working Capital	14.83	20.96
5	BST for Pension Trust Fund	250.79	252.81
6	Return on Equity	14.27	124.28
7	Contribution to Contingency Reserve	3.16	4.03
8	Less: Non-Tariff Income/ Other Income	54.01	67.20
9	**Aggregate Revenue Requirement**	**540.17**	**723.69**
10	Less: Revenue from STOA/MTOA Charges	12.00	4.58
11	**Net Aggregate Revenue Requirement**	**528.17**	**719.11**
12	**Revenue Gap for FY 2024-25**	**-**	**190.94**

5.21.2 In view of the above, AEGCL requests the Hon'ble Commission to approve the Net Aggregate Revenue Requirement of Rs. 719.11 Cr.

5.22 Tariff Computation for FY 2024-25

5.22.1 AEGCL summarizes the Truing up exercise for FY 2022-23, APR for FY 2023-24 and the ARR for FY 2024-25 and submits the following Tariff computation.

5.22.2 The Gap on account of True-up for FY 2022-23 along with the Carrying Cost has been computed below. The Interest rate has been considered equal to the average State Bank of India MCLR (1 Year tenure) prevalent last available six months plus 300 basis points as per AERC (MYT Regulations) 2021.

Table 79 : Total Gap of FY 2022-23 along with Carrying Cost

Particulars	Rs. Crs.
Revenue Gap for FY 2022-23	144.14
Carrying cost on Revenue Gap for FY 2022-23	32.76
Total Gap / (Surplus)	**176.90**

Table 80 : Carrying/ Holding Cost of FY 2022-23

Particulars	FY 2022-23	FY 2023-24	FY 2024-25
Opening Balance	0	144.14	**144.14**
Recovery/(Addition) during the year	(144.14)	-	144.14
Closing Balance	144.14	144.14	-
Rate of Interest (%)	10.86%	11.53%	11.53%
Carrying Cost	7.83	16.62	8.31
Total Carrying Cost	-	-	**32.76**

Table 81: Tariff Computation for FY 2024-25

Particulars	FY 2024-25
Standalone Annual Revenue Requirement (Rs. Crs.)	719.11
Previous Revenue Gap with carrying cost (Rs. Crs.)	176.90
Net Annual Revenue Requirement (Rs. Crs.)	**896.01**
Transmission Charge (Rs. / kWh)	**0.71**
Transmission Access Charge (Rs. /MW/Day)	**9,247.42**

5.22.3 Considering 2654.60 MW based on 10% escalation over Peak load of 2413.27 MW (16.09.2023) during FY 2023-24, transmission access charge has been computed.

5.22.4 In view of the above, AEGCL requests the Hon'ble Commission to approve the Transmission Charge of Rs. 0.71/kWh and Transmission Access Charge of Rs. 9247.42 per MW/day for FY 2024-25.

6 COMPLIANCE OF DIRECTIVES

In reference to the directives issued by the Commission to AEGCL in the Tariff Order dated 29th March 2023, AEGCL submitted the replies to directives on quarterly basis to the Hon'ble Commission. AEGCL, hereby submit the replies to the Compliance of Directives to the Commission as under:

Sl. No.	Directives (As on 30th Nov'23)	Reply of AEGCL
1	**Directive 1:** Funding from Government of Assam for employer's contribution to Terminal Liabilities based on Actuarial valuation	• AEGCL submits that the actuarial valuation conducted in FY 2019 was placed before the GoA to provide one-time funding. As per the calculation, the past unfunded liability was Rs. 7086.24 Crs. (Excluding GPF) as on 31.01.2019. • However, GoA has not provided one-time funding and continued to provide budgetary support for yearly deficit. • The GoA has provided Budgetary Support of Rs.285.00 Cr. for the FY2022-23. The GoA has made Budgetary provision of Rs. 240.89 Cr. for the FY 2023-24 in the General Budget-2023.
2	**Directive 2:** Energy Audit and Implementation of SAMAST	• The revised Energy Audit report for FY 2022-23 provided by SLDC is attached herewith as **Annexure-III** • The status of the SAMAST is attached herewith as **Annexure-XII** • The status of the 33 kV metering project is attached as **Annexure-XII**
3	**Directive 3:** Capacity Building	•AEGCL has submitted the training calendar to the Hon'ble Commission for FY 2023-24 on 16.05.2023.
4	**Directive 4:** Maintenance of Project-wise Database	•AEGCL submits that the AEGCL is maintaining the database on the individual projects under each scheme which is reviewed by the Hon'ble Commission on various meetings on regular basis. • Further, AEGCL has submitted the upgraded project/scheme wise database in the AEGCL true-up petition for FY 2022-23.

7 PRAYERS BEFORE THE HON'BLE COMMISSION

1. The present petition provides, AEGCL's approach for formulating the proposed tariff for ensuing year, the broad basis for projections used, summary of the proposals being made to the Hon'ble Commission.
2. In order to align the thoughts and principles behind the Tariff Proposal and the ARR, AEGCL respectfully seeks an opportunity to present their case prior to the finalization of the Tariff Order. AEGCL believes that such an approach would go a long way towards providing a fair opportunity to all the stakeholders including AEGCL and may eliminate the need for a review or clarification.
3. AEGCL may also be permitted to propose suitable changes to the ARR and the mechanism of meeting the revenue on further analysis, prior to the final approval by the Hon'ble Commission.
4. In view of the above, the Petitioner respectfully prays that Hon'ble Commission may:
   - Accept the Annual Revenue Requirements and Tariff proposal for Transmission Business respectively in accordance with:
   - The guidelines outlined in previous AERC Orders passed in various matters relating to AEGCL; and
   - To admit the True-up for FY 2022-23, APR for FY 2023-24 and ARR for FY 2024-25 as per the provisions of the AERC (MYT) Regulations 2021 and consider present Petition for further proceedings before Hon'ble Commission;
   - To approve the total recovery of Aggregate Revenue Requirement and revenue gap for FY 2024-25 along with other claims as proposed by AEGCL;
   - To grant any other relief as the Hon'ble Commission may consider appropriate;
   - To pass any other order as the Hon'ble Commission may deem fit and appropriate under the circumstances of the case and in the interest of justice;
   - To condone any error/omission and to give opportunity to rectify the same;
   - To permit AEGCL to make further submissions, addition and alteration to this Petition as may be necessary from time to time;

Regulatory Formats of AEGCL

S. No.	Particulars	Form No.
1	Aggregate Revenue Requirement Summary	F1
2	Transmission Losses	F2a
3	Transmission Availability	F2b
4	Repair & Maintenance Expenses	F18
5	Employee Expenses	F19
7	Administration and General Expenses	F20
8	Bulk Supply Tariff (BST)	F29
9	Fixed Assets & Depreciation	F21
10	Interest & Finance Charges	F22
11	Working Capital Requirements	F25
12	Statement of Equity	F23
13	Details of Non-Tariff Income	F26
14	Details of Expenses Capitalised	F24
15	Consumer Contributions & Grants towards cost of capital Assets	F21a
16	Statement of Work in progress	F17
17	Calculation of normative loans	F12b
18	Funding of Capitalisation	F30
19	Sharing of Gain/(Losses)	F31
20	Normative Loan Computation	F32
21	Conversion of Grant & Loan into Equity	F33
22	Contingency Reserve	F34
23	SBI MCLR Rate	F35

Revenue gap with carrying cost of Truing up & APR

Particulars (A)	True-up of FY 22-23	APR of FY 2023-24	ARR of FY 2024-25
Opening Balance	0	144.14	**144.14**
Recovery/(Addition) during the year	(144.14)	-	**144.14**
Closing Balance	144.14	144.14	
Rate of Interest (%)	10.86%	11.53%	11.53%
Carrying Cost	7.83	16.62	8.31
Total Carrying Cost			**32.76**

Revenue surplus / gap with carrying cost of Truing up & APR

Particulars	Rs. Crore (Previous TO)
Revenue Gap for FY 2022-23	144.14
Carrying cost on Revenue Gap for FY 2022-23	32.76
Total Gap	**176.90**

Determination of Tariff for FY 2024-25

Particulars	FY 2024-25 (Previous TO)
Stand-alone Annual Revenure Requirement	719.11
Previous Revenue Gap / (Surplus) with carrying cost	176.90
Net Annual Revenue Requirement	**896.01**
Transmission Charge (Rs./ kWh)	**0.71**
Peak Load (2413.27 MW)- 16.09.2023	2,654.60
Transmission Access Charge (Rs/MW/Day)	**9,247.42**

Aggregate Revenue Requirement Summary

Form - F1
(Rs. Crore)

S. No.	Particulars	FY 22-23		FY 23-24				FY 24-25	
		True up		APR				ARR	
		Approved in Order dtd 21.03.22	AEGCL Submission	Approved in Order dtd 29.03.23	FY 23-24 H1	FY 23-24 H2	Total AEGCL Submission	Approved in Order dtd 21.03.22	Projected
1	O&M Expenses	**223.11**	219.05	**239.07**	119.98	119.98	239.97	249.87	261.83
a	Employee Cost	**184.39**	185.39	**196.94**	98.68	98.68	197.36	209.48	210.10
b	R&M Expenses	**28.89**	22.99	**30.60**	15.55	15.55	31.10	29.73	39.31
c	A&G Expenses	**9.83**	10.67	**11.53**	5.76	5.76	11.51	10.66	12.42
2	Depreciation	**35.96**	138.92	**117.69**	47.79	47.79	95.58	39.47	126.64
3	Interest & Finance Charges	**24.32**	15.06	**9.97**	2.00	2.00	3.99	21.79	0.34
4	Interest on Working Capital	**12.30**	16.58	**17.73**	9.64	9.64	19.29	14.83	20.96
5	BST for Pension Trust Fund	**214.38**	219.71	**230.34**	125.77	125.77	251.55	250.79	252.81
6	Return on Equity	**13.68**	75.70	**111.65**	60.66	60.66	121.32	14.27	124.28
7	Income Tax	-	-	-	-	-	-		-
8	Contribution to Contingency Reserve	**2.71**	2.73	**2.89**	1.51	1.51	3.02	3.16	4.03
9	Less: Non-Tariff Income/ Other Income	**54.01**	78.50	**58.45**	47.10	20.13	67.23	54.01	67.20
10	**Aggregate Revenue Requirement**	**472.45**	**609.24**	**670.89**	**320.26**	**347.23**	**667.49**	**540.17**	**723.69**
11	**Net Aggregate Revenue Requirement**	**472.45**	**609.24**	**670.89**	**320.26**	**347.23**	**667.49**	**540.17**	**723.69**
12	Add: Incentive on Higher Transmission Availability	-	3.38	-		-	-		
13	Add: Sharing of (Gains)/Loss	-	(3.78)				-		
15	**ARR after Sharing (Gains)/Losses and Incentive**	**472.45**	**608.84**	**670.89**	**320.26**	**347.23**	**667.49**	**540.17**	**723.69**
16	**Revenue with Approved Tariff for FY 2022-23**	**472.45**	**472.45**	**670.89**	**-**	**-**	**670.89**		**540.17**
17	**Less: Revenue from STOA/MTOA Charges**	**12.00**	**4.25**	**12.00**	**1.03**	**3.55**	**4.58**	**12.00**	**4.58**
18	**Net Aggregate Revenue Requirement**	**460.45**	**604.59**	**658.89**	**319.23**	**343.68**	**662.91**	**528.17**	**719.11**
19	**Revenue Gap /(Surplus) for FY 2022-23**	-	**144.14**				**4.03**		**190.94**

Form - 2a
(Rs. Crore)

Transmission Loss

S.No.	Particulars	Approved in Order dtd 21.03.22	AEGCL Submission	Approved in Order dtd 21.03.22	AEGCL Estimation	Approved in Order dtd 21.03.22	AEGCL Projection
		FY 22-23 True Up		FY 23-24 APR		FY 24-25 ARR	
1	Energy Injected (MU)		11452.47		13043.92		13109.14
2	Energy Sent Out to APDCL (MU)		10985.26		12577.42		12640.31
3	Energy Sent Out to OA Consumers (MU)		88.37		38.33		38.71
4	Total Energy Sent Out		11073.63		12615.75		12,679.02
4	Transmission Loss (MU)		378.84		428.17		430.12
5	Transmission Loss (%)	**3.27%**	**3.31%**	**3.25%**	**3.28%**	**3.23%**	**3.28%**

Form - 2b
(Rs. Crore)

Transmission Availability

S.No.	Particulars	Approved in Order dtd 21.03.22	AEGCL Submission (%)	Approved in Order dtd 21.03.22	AEGCL Submission (%)	Approved in Order dtd 21.03.22	ARR
		FY 22-23 True Up		FY 23-24 APR		FY 24-25	
1	April	98.50%	99.06%	98.50%	99.55	98.50%	99.50%
2	May		99.37%		99.24		99.50%
3	June		99.43%		99.63		99.50%
4	July		99.27%		99.64		99.50%
5	August		98.84%		99.64		99.50%
6	September		99.05%		99.61		99.50%
7	October		99.33%		99.00		99.50%
8	November		99.23%		99.00		99.50%
9	December		99.32%		99.00		99.50%
10	January		99.22%		99.00		99.50%
11	February		99.31%		99.00		99.50%
12	March		99.15%		99.00		99.50%

Form - 29
(Rs. Crore)

Special Charges on Bulk Suppy Tariff

S.No.	Particulars	FY 22-23		FY 23-24		FY 24-25
		True-Up		APR		ARR
		Approved in Order dtd 21.03.22	AEGCL Submission	Approved in Order dtd 29.03.23	AEGCL Submission	AEGCL Submission
1	Special Charges on Bulk Supply Tariff	214.38	219.71	230.34	251.55	252.81
	Total	**214.38**	**219.71**	**230.34**	**251.55**	**252.81**

Form - F25
(Rs. Crore)

Working Capital Requirements

S.No.	Particulars	Units	FY 22-23		FY 23-24		FY 24-25
			True up		APR		ARR
			Approved in Order dtd 21.03.22	AEGCL Submission	Approved in Order dtd 29.03.23	Total AEGCL Submission	AEGCL Submission
1	O&M expenses for 1 month	Rs. Crore	18.59	18.25	19.92	20.00	21.82
2	Maintenance spares @ 15% of O&M	Rs. Crore	33.47	32.86	35.86	36.00	39.27
3	Receivables for two months	Rs. Crore	70.94	101.54	111.82	111.25	120.61
4	**Total Working Capital**	Rs. Crore	**123.00**	152.65	**167.60**	**167.24**	**181.71**
5	Rate of Interest	%	10.00%	10.86%	10.58%	11.53%	11.53%
6	**Interest on Working Capital**	**Rs. Crore**	**12.30**	16.58	17.73	**19.29**	**20.96**

Form - F19
(Rs. Crore)

Actual Employee Expenses

S.No.	Particulars	FY 22-23 True Up		FY 23-24 APR			
		True up		APR			
		Approved in Order dtd 21.03.22	AEGCL Submission	Approved in Order dtd 29.03.23	FY 23-24 H1	FY 23-24 H2	Total AEGCL Submission
1	Salaries		96.03		51.71	51.25	102.96
2	Additional Pay		-		0.00	0.00	0.00
3	Dearness Allowance (DA)		31.72		18.81	19.32	38.13
4	Other Allowances & Relief		15.12		8.24	7.96	16.20
5	Addl. Pay & C.Off Encashment		-		0.00	0.00	0.00
6	Interim Relief / Wage Revision		-		0.00	0.00	0.00
7	Honorarium/Overtime		0.12		0.02	0.02	0.03
8	Bonus/ Exgratia To Employees		0.36		0.00	0.36	0.37
9	Medical Expenses Reimbursement		0.21		0.17	0.11	0.28
10	Travelling Allowance(Conveyance Allowance)		-		0.00	0.00	0.00
11	Leave Travel Assistance		0.04		0.02	0.02	0.04
12	Earned Leave Encashment	184.39	2.51	196.94	1.51	1.26	2.76
13	Payment Under Workman's Compensation And Gratuity		8.02		1.97	6.97	8.94
14	Subsidised Electricity To Employees		-		0.00	0.00	0.00
15	Any Other Item		-		0.00	0.00	0.00
16	Staff Welfare Expenses		0.20		0.04	0.15	0.18
17	Apprentice And Other Training Expenses		-		0.00	0.00	0.00
18	Contribution To Terminal Benefits		20.60		10.29	9.63	19.92
19	Provident Fund Contribution		-		0.00	0.00	0.00
20	Provision for PF Fund		-		0.00	0.00	0.00
21	Any Other Items		-		0.00	0.00	0.00
22	**Total Employee Costs**		174.93		**92.78**	**97.05**	**189.83**
23	Less: Employee expenses capitalised						
24	**Net Employee expenses**	**184.39**	**174.93**	**196.94**	**92.78**	**97.05**	**189.83**

Normative Calculation of Employee expense

EMPn = (EMPn-1) x (1+Gn) x (CPI inflation)

			FY 22-23	FY 23-24	FY 24-25
1	Base Employee Cost (n-1)		173.34	185.39	197.36
2	Avg CPI rate of precedeeing three years		5.89%	5.40%	5.40%
3	Gn (Growth Factor for nth Year)		1.00%	1.00%	1.00%
4	Normative Employee Cost (Excl. ROP)		185.39	197.36	210.10
5	Revision of Pay				
	Normative Employee Cost for the year (Incl. Revision of Pay)		185.39	197.36	210.10

CPI

FY 2022-23	377.62	6.06%	**5.40%**
FY 2021-22	356.06	5.13%	**5.89%**
FY 2020-21	338.69	5.02%	**6.00%**

Form - F18
(Rs. Crore)

Actual Repair & Maintenance Expenses

S.No.	Particulars	FY 22-23		FY 23-24			
		True up		APR			
		Approved in Order dtd 21.03.22	AEGCL Submission	Approved in Order dtd 29.03.23	FY 23-24 H1	FY 23-24 H2	Total AEGCL Submission
1	Plant & Machinery	28.89	7.97	30.60	2.72	5.43	8.15
2	Buildings		5.04		2.29	4.50	6.79
3	Civil works		0.99		0.57	2.87	3.44
4	Hydraulic Works		-		0.00	0.00	0.00
5	Lines, Cable Networks etc.		4.16		2.03	4.06	6.09
6	Vehicles		0.20		0.05	0.11	0.16
7	Furniture & Fixtures		0.11		0.09	0.18	0.27
8	Office Equipment		0.56		0.21	0.42	0.62
9	Total		19.01		7.96	17.57	25.53
10	Any other items (Capitalisation)		-				
	Total	**28.89**	**19.01**	**30.60**	**7.96**	**17.57**	**25.53**

Normative Calculation of R&M expense

R&Mn = K x (GFAn-1) x (WPI inflation)

		FY 22-23	FY 23-24	FY 24-25
Opening GFA for previous year		2,557.99	2,732.21	3,022.08
Closing GFA for previous year		2,732.21	3,022.08	4,031.70
Average GFA for previous year		**2,645.10**	**2,877.14**	**3,526.89**
K Factor		0.75%	0.75%	0.75%
WPI Inflation		5.32%	7.90%	7.90%
Normative R&M Expense		**20.89**	**23.28**	**28.54**
Expenditure for Colony Maintanance of AEGCL		2.10	5.93	9.76
Additional amount for Cyber Security			1.88	1.01
Net Normative R&M Expense		**22.99**	**31.10**	**39.31**

WPI

FY 2022-23	152.53	9.41%	**7.90%**
FY 2021-22	139.41	13.00%	**5.32%**
FY 2020-21	123.37	1.29%	**2.41%**

Form - 30

Funding of Capitalisation (Rs.Crs.)

S.No.	Particulars	FY 22-23		FY 23-24		FY 24-25
		True up		APR		ARR
		Approved in Order dtd 21.03.22	AEGCL Submission	Approved in Order dtd 29.03.23	Total AEGCL Submission	AEGCL Submission
1	Grant		168.12	224.66	984.31	245.04
2	Equity		113.23		9.07	0.00
3	Debt		8.51	0.34	16.23	28.11
	Total Capitalisation	**200.00**	**289.87**	**225.00**	**1,009.62**	**273.15**

Form - F20

Actual Administration and General Expenses (Rs. Crore)

S.No.	Particulars	FY 22-23 True up		FY 23-24 APR			
		Approved in Order dtd 21.03.22	AEGCL Submission	Approved in Order dtd 29.03.23	FY 23-24 H1	FY 23-24 H2	Total AEGCL Submission
1	Lease/ Rent/Rates and taxes		0.50		0.32	0.19	0.51
2	Insurance		0.08		0.04	0.04	0.08
3	Revenue Stamp Expenses Account		-		0.00	0.00	0.00
4	Telephone, Postage, Telegram & Telex Charges		0.14		0.07	0.08	0.15
5	Incentive & Award To Employees/Outsiders		0.31		0.00	0.00	0.00
6	Consultancy Charges		0.42		0.19	0.23	0.42
7	Technical Fees		-		0.00	0.00	0.00
8	Other Professional Charges		0.77		0.38	0.39	0.77
9	Conveyance And Travelling		1.40		0.79	1.17	1.96
10	License and Registration Fees		0.02		0.00	0.03	0.03
11	Vehicle Expenses		4.82		2.53	2.45	4.98
12	Security / Service Charges Paid To Outside Agencies		-		0.00	0.00	0.00
13	Fee And Subscriptions Books And Periodicals		3.02		1.25	2.00	3.25
14	Printing And Stationery		0.47		0.17	0.33	0.50
15	Advertisement Expenses		0.46		0.14	0.31	0.45
16	Contributions/Donations To Outside Institutes / Associations					0.00	0.00
17	Electricity Charges To Offices	9.83	0.53	11.53	0.29	0.23	0.52
18	Water Charges		0.00		0.01	0.00	0.01
19	Entertainment Charges		0.23		0.08	0.17	0.25
20	Miscellaneous Expenses		0.12		0.34	0.13	0.47
21	Legal Charges		0.15		0.18	0.10	0.28
22	Auditor's Fee		0.10		0.06	0.06	0.12
23	Freight On Capital Equipments		0.01		0.01	0.00	0.01
24	Purchase Related Advertisement Expenses		-		0.00	0.00	0.00
25	Vehicle Running Expenses Truck / Delivery Van		0.08		0.04	0.04	0.08
26	Vehicle Hiring Expenses Truck / Delivery Van		-		0.00	0.00	0.00
27	Other Freight		0.01		0.00	0.00	0.00
28	Fees including TA and DA for non-official member of the Board				0.26	0.14	0.40
29	Fees for conducting recruitment & Other Departmental Examinations		0.01		0.00	0.02	0.02
30	Participation fees paid for Training/conference		0.00		0.00	0.00	0.00
31	Training of Staff and Officers		0.12		0.00	0.09	0.09
32	**Total A&G Expenses**	**9.83**	**13.78**	**11.53**	**7.15**	**8.20**	**15.35**

Normative Calculation of A&G expense

A&Gn = (A&Gn-1) x (WPI inflation) + Provision

	FY 22-23	FY 23-24	FY 24-25
A&G Expense for Previous year	10.13	10.67	11.51
WPI Inflation	5.32%	7.90%	7.90%
Provision	0	0	0
Normative A&G Expense for the year	**10.67**	**11.51**	**12.42**

WPI

FY 2022-23	152.53	9.41%	**7.90%**
FY 2021-22	139.41	13.00%	**5.32%**
FY 2020-21	123.37	1.29%	**2.41%**

Form 21: Assets & Depreciation

(A) Gross Fixed Assets

(Rs. Crore)

Sr. No.	Particulars		FY 2022-23				FY 2023-24				FY 2024-25			
			Actual				Estimated				Projected			
			Balance at the beginning of the year	Additions during the year	Retirement of assets during the year	Balance at the end of the year	Balance at the beginning of the year	Additions during the year	Retirement of assets during the year	Balance at the end of the year	Balance at the beginning of the year	Additions during the year	Retirement of assets during the year	Balance at the end of the year
1	Land owned under full ownership		44.98	2.68	-	47.66	47.66	-0.06	-	47.60	47.60	-		47.60
2	Land under lease		-	-	-	-	-	-	-	-	-	-		-
3	Building		61.67	3.53	-	65.20	65.20	6.31	-	71.50	71.50	-		71.50
4	Hydraulic		2.64	-	-	2.64	2.64	-	-	2.64	2.64	-		2.64
5	Other Civil Works		131.26	28.73	-	159.98	159.98	14.08	-	174.06	174.06	20.71		194.77
6	Plant & Machinery		1,314.68	111.95	-	1,426.63	1,426.63	264.09	-	1,690.72	1,690.72	107.06		1,797.78
7	Lines & Cable Network		1,159.03	141.43	-	1,300.46	1,300.46	722.76	-	2,023.23	2,023.23	141.27		2,164.49
8	Vehicles		4.95	-	-	4.95	4.95	-	-	4.95	4.95	-		4.95
9	Furniture & Fixtures		7.77	0.57	-	8.35	8.35	1.39	-	9.74	9.74	0.80		10.54
10	Office Equipment		5.23	0.97	-	6.21	6.21	1.05	-	7.26	7.26	3.31		10.57
11	Any other assets		-	-	-	-	-	-	-	-	-	-		-
	Total		**2,732.21**	**289.87**	**-**	**3,022.08**	**3,022.08**	**1,009.62**	**-**	**4,031.70**	**4,031.70**	**273.15**	**-**	**4,304.85**

Form 21: Assets & Depreciation

(B) Depreciation

(Rs. Crore)

Sr. No.	Particulars		FY 2022-23			FY 2023-24			FY 2024-25		
			Actual			Estimated			Projected		
		Depreciation Rate	Accumulated depreciation at the beginning of the year	Additions during the year	Accumulated depreciation at the end of the year	Accumulated depreciation at the beginning of the year	Additions during the year	Accumulated depreciation at the end of the year	Accumulated depreciation at the beginning of the year	Additions during the year	Accumulated depreciation at the end of the year
1	Land owned under full ownership	0.00%	-	-	-	-		-	-		-
2	Land under lease	3.34%	0.06	0.01	0.07	0.07		0.07	0.07	-	0.07
3	Building	3.34%	25.61	2.48	28.09	28.09	2.49	30.58	30.58	2.39	32.97
4	Hydraulic	5.28%	2.51	-	2.51	2.51	0.06	2.57	2.57	-	2.57
5	Other Civil Works	3.34%	23.01	9.52	32.53	32.53	4.93	37.46	37.46	6.16	43.62
6	Plant & Machinery	5.28%	623.71	81.24	704.95	704.95	74.50	779.46	779.46	92.10	871.55
7	Lines & Cable Network	5.28%	824.40	67.54	891.95	891.95	73.99	965.94	965.94	110.56	1,076.49
8	Vehicles	9.50%	4.45	-	4.45	4.45	0.21	4.66	4.66	-	4.66
9	Furniture & Fixtures	6.33%	4.39	0.46	4.85	4.85	0.50	5.35	5.35	0.64	6.00
10	Office Equipment	6.33%	3.75	0.66	4.41	4.41	0.62	5.03	5.03	0.56	5.60
11	Any other assets	5.28%	-	-	-	-	-	-	-	-	-
	Total		**1,511.90**	**161.92**	**1,673.82**	**1,673.82**	**157.30**	**1,831.12**	**1,831.12**	**212.41**	**2,043.52**

Form 21: Assets & Depreciation

(C) Net Fixed Assets

(Rs. Crore)

Sr. No.	Particulars		FY 2022-23				FY 2023-24				FY 2024-25			
			Actual				Actual				Projected			
			Fixed Asset - beginning of the year	Additions during the year	Withdrawals during the year	Fixed Asset - end of the year	Fixed Asset - beginning of the year	Additions during the year	Withdrawals during the year	Fixed Asset - end of the year	Fixed Asset - beginning of the year	Additions during the year	Withdrawals during the year	Fixed Asset - end of the year
1	Land owned under full ownership		44.98	2.68	-	47.66	47.66	-0.06	-	47.60	47.60	-	-	47.60
2	Land under lease		-0.06	-0.01	-	-0.07	-0.07	-	-	-0.07	-0.07	-	-	-0.07
3	Building		36.06	1.05	-	37.11	37.11	3.82	-	40.93	40.89	-2.39	-	38.50
4	Hydraulic		0.13	-	-	0.13	0.13	-0.06	-	0.07	0.07	-	-	0.07
5	Other Civil Works		108.25	19.21	-	127.46	127.46	9.15	-	136.61	136.61	14.55	-	151.16
6	Plant & Machinery		690.97	30.71	-	721.68	721.68	189.59	-	911.26	909.26	14.96	-	924.23
7	Lines & Cable Network		334.63	73.88	-	408.51	408.51	648.78	-	1,057.29	1,057.29	30.71	-	1,088.00
8	Vehicles		0.49	-	-	0.49	0.49	-0.21	-	0.29	0.29	-	-	0.29
9	Furniture & Fixtures		3.38	0.11	-	3.49	3.49	0.89	-	4.38	4.37	0.16	-	4.53
10	Office Equipment		1.48	0.31	-	1.79	1.79	0.43	-	2.22	2.20	2.75	-	4.95
11	Any other assets		-	-	-	-	-	-	-	-	-	-	-	-
	Total		**1,220.32**	**127.95**	**-**	**1,348.26**	**1,348.26**	**852.32**	**-**	**2,200.58**	**2,198.52**	**60.74**	**-**	**2,259.26**

Form - 31

Sharing of Gain/(Losses) -O&M expense FY 2022-23 (Rs. Crore)

S. No	Particulars	Actual	Normative	Gain/(Losses)	Gains/(Losses) to be shared with APDCL
		a	b	c=b-a	d=c*1/3
1	Employee Cost	174.93	185.39	10.46	
1 (a)	Less: Terminal Liabilities	28.63	28.63	-	-
1 (b)	Less: ROP Arrears		-	-	-
2	Employee Cost excl. Terminal Liabilities	146.30	156.76	10.46	3.49
3	Repair & Maintenance	19.01	22.99	3.99	1.33
4	Administrative & General Expenses	13.78	10.67	-3.11	-1.04
5	**Total (A)**	**179.08**	**190.42**	**11.34**	**3.78**

Form - F22

Interest & Finance Charges Rs. Crore

S.No.	Particulars	FY 22-23 AEGCL Submission
	Loan Details	
A	**Interest charges on State Govt. Loans, Bonds And Advances,**	
1	State Government Loans	0.88
2	ADB Loan	
3	Central Government Loans	
4	General Provident Fund	1.60
	Sub-total	**2.49**
B	**Interest on Long Term Loans/Credits from the FIs/banks/organisations approved by the State Govt.**	
	Secured Loans	
	Unsecured Loans	
C	Other Interest & Finance Charges	
	Cost of raising Finance/Bank Charges	0.01
	Penal Interest Charges	
	Sub-total	**0.01**
D	**Grand Total Of Interest & Finance Charges (A+B+C)**	**2.49**
E	Less : Interest & Finance Charges Capitalised	0.45
	Net Total Of Interest Finance Charges (D-E)	**2.04**

S.No.	Particulars	FY 22-23 Actual						
		Rate of Interest	Opening Balance	Amount received	Principal repayment / Conversion to Equity		Interest Due	Closing Balance
	Loan Details							
A	**Interest charges on State Govt. Loans, Bonds And Advances,**							
1	State Government Loans	10%	551.52	3.61	542.73		0.88	12.40
2	ADB Loan	10.50%	95.68	0.0	95.68			0.00
3	Central Government Loans			-				0.00
4	General Provident Fund	7.10%	26.62	2.22	9.64		1.60	20.81
	Sub-total		**673.82**	**5.83**	**648.04**		**2.49**	**33.21**
	Interest on Long Term Loans/Credits from the FIs/banks/organisations approved by the State Govt.							
A	Secured Loans						0.00	0
B	Unsecured Loans						0.00	0
C	Other Interest & Finance Charges							0
	Cost of raising Finance/Bank Charges						0.01	0
	Penal Interest Charges							0
	Sub-total		**0.00**	**0.00**	**0.00**		**0.01**	**0.00**
D	**Grand Total Of Interest & Finance Charges (A+B+C)**		**673.82**	**5.83**	**648.04**		**2.49**	**33.21**
E	Less : Interest & Finance Charges Capitalised							0
	Net Total Of Interest Finance Charges (D-E)		**673.82**	**5.83**	**648.04**		**2.49**	**33.21**

S.No.	Particulars	FY 23-24 (H1) Actual						
		Rate of Interest	Opening Balance	Amount received	Principal repayment	Converted to Equity	Interest Due	Closing Balance
	Loan Details							
A	**Interest charges on State Govt. Loans, Bonds And Advances,**							
1	State Government Loans	10%	12.40		0.88	11.52		
2	ADB Loan	10.50%						
3	Central Government Loans							
4	General Provident Fund	8.00%	20.81	0.89	3.14		1.43	19.99
	Sub-total		**33.21**	**0.89**	**4.02**		**1.43**	**19.99**
	Interest on Long Term Loans/Credits from the FIs/banks/organisations approved by the State Govt.							
A	Secured Loans							0
B	Unsecured Loans							0
C	Other Interest & Finance Charges							0
	Cost of raising Finance/Bank Charges							0
	Penal Interest Charges							0
	Sub-total		**0.00**	**0.00**	**0.00**		**0.00**	**0.00**
D	**Grand Total Of Interest & Finance Charges (A+B+C)**		**33.21**	**0.89**	**4.02**		**1.43**	**19.99**
E	Less : Interest & Finance Charges Capitalised							0
	Net Total Of Interest Finance Charges (D-E)		**33.21**	**0.89**	**4.02**		**1.43**	**19.99**

S.No.	Particulars	FY 23-24 (H2) Estimated						
		Rate of Interest	Opening Balance	Amount received	Principal repayment		Interest Due	Closing Balance
	Loan Details							
A	**Interest charges on State Govt. Loans, Bonds And Advances,**							
1	State Government Loans	10%		4.71				
2	ADB Loan	10.50%						
3	Central Government Loans							
4	General Provident Fund	8.00%	19.99	0.89	0.00			20.88
	Sub-total		**19.99**	**5.60**	**0.00**		**0.00**	**20.88**
	Interest on Long Term Loans/Credits from the FIs/banks/organisations approved by the State Govt.							
A	Secured Loans						0.00	0
B	Unsecured Loans						0.00	0
C	Other Interest & Finance Charges							0
	Cost of raising Finance/Bank Charges						0.01	0
	Penal Interest Charges							0
	Sub-total		**0.00**	**0.00**	**0.00**			**0.00**
D	**Grand Total Of Interest & Finance Charges (A+B+C)**		**19.99**	**5.60**	**0.00**		**0.00**	**20.88**
E	Less : Interest & Finance Charges Capitalised							0
	Net Total Of Interest Finance Charges (D-E)		**0.00**	**5.60**	**0.00**		**0.00**	**20.88**

S.No.	Particulars	FY 23-24 (Total) Estimated						
		Rate of Interest	Opening Balance	Amount received	Principal repayment		Interest Due	Closing Balance
	Loan Details							
A	**Interest charges on State Govt. Loans, Bonds And Advances,**							
1	State Government Loans	10%	12.40	4.71	1		0.00	16.23
2	ADB Loan	10.50%	0.00	0.00	0		0.00	0.00
3	Central Government Loans		-	-	0		0.00	0.00
4	General Provident Fund	8.0%	40.80		3.14		1.43	37.66
	Sub-total		**53.20**	**4.71**	**4.02**		**1.43**	**53.89**
	Interest on Long Term Loans/Credits from the FIs/banks/organisations approved by the State Govt.							
A	Secured Loans						0.00	0
B	Unsecured Loans						0.00	0
C	Other Interest & Finance Charges						0.00	0
	Cost of raising Finance/Bank Charges						0.01	0
	Penal Interest Charges						0.00	0
	Sub-total		**0.00**	**0.00**	**0.00**		**0.01**	**0.00**
D	**Grand Total Of Interest & Finance Charges (A+B+C)**		**53.20**	**6.49**	**4.02**		**1.43**	**53.89**
E	Less : Interest & Finance Charges Capitalised						0.00	0
	Net Total Of Interest Finance Charges (D-E)		**53.20**	**6.49**	**4.02**		**1.43**	**53.89**

Form - 32

Normative Loan Computation (Rs.Crs.)

S.No.	Particulars	FY 2022-23		FY 23-24		FY 24-25
		True Up		APR		Revised ARR
		Approved in Order dtd 21.03.22	AEGCL Submission	Approved in Order dtd 29.03.23	AEGCL Submission	AEGCL Submission
1	Net Normative Opening Loan	255.95	216.38	159.58	85.98	6.62
2	Addition of normative loan during the year	6.49	8.51	0.34	16.23	28.11
3	Normative Repayment during the year	35.96	138.92	118.59	95.58	126.64
4	**Net Normative Closing Loan**	**226.48**	**85.98**	**41.33**	**6.62**	**-**
5	**Interest Rate**	**10.08%**	**9.96%**	**9.92%**	**8.60%**	**10.08%**
6	**Interest Expenses on Loan**	**24.31**	**15.05**	**9.96**	**3.98**	**0.33**
7	Finance Charges	0.01	**0.01**	0.01	0.01	0.01
8	**Total Interest and Finance Charges**	**24.32**	**15.06**	**9.97**	**3.99**	**0.34**

Depreciation Computation

Particulars	FY 22-23	FY 23-24	FY 24-25
Gross Fixed Assets (a)	2,732.21	3,022.08	4,031.70
Gross Fixed Assets excluding Land (b)	2,684.55	2,974.48	3,984.10
Conersion of Grant to Equity	1,951.14	2,089.45	2,089.45
Opening CWIP (c)	904.13	833.60	323.19
Grant (CWIP + Assets) (d)	509.79	1,494.11	1,739.15
Grant towards GFA (e=d*b/(b+c))	381.36	1,167.04	1,608.65
Total Depreciation	161.92	157.30	212.41
Less : Dep twds assets through Grant/Consumer cont	23.00	61.72	85.76
Depreciation for the year (excl assets through grant and consumer contribution (to be considerd in ARR)	138.92	95.58	126.64

Form - F17

Work In Progress Rs. Crore

S.No.	Particulars	FY 22-23	FY 23-24			FY 24-25
		True up	APR			ARR
		AEGCL Submission	FY 23-24 H1	FY 23-24 H2	Total	AEGCL Submission
1	**Opening balance**	904.13	833.60	776.72	833.60	323.19
	Less:					
	Excess CAPEX booked during prior period	70.06	17.51			
	Add:					
2	i) Capital expenditure	261.82	78.48	420.73	499.21	901.45
	ii) Interest & Finance charges capitalised (78.900)	0.45			-	
	iii) Other expenses capitalised		-	-	-	
	Less:					
	Inter Unit Transfer of CAPEX					
	Total capital expenditure for the year (i+ii+iii)	262.27	78.48	420.73	499.21	901.45
	Less :Capitalisation	262.73	117.85	163.43	1,009.62	273.15
	Closing Balance	833.60	776.72	1,034.02	323.19	951.50

Form - F21(a)

Rs. Crore

Consumer Contributions & Grants towards cost of capital Assets

S.No.	Particulars	FY 22-23					FY 23-24												FY 24-25
		True up					H1 Actual					H2 Projection			Total Estimated					Revised ARR
		Balance at the beginning of the year	Addition during the year	Conversion to equity during the year	Adjustment to Income	Balance at the end of the year	Balance at the beginning of the year	Addition during the year	Conversion to equity during the year	Adjustment to Income	Balance at the end of the year	Balance at the beginning of the year	Addition during the year	Balance at the end of the year	Balance at the beginning of the year	Addition during the year	Conversion to equity during the year	Adjustment to Income	Balance at the end of the year	Addition during the year
1	Consumer Contribution Towards Cost Of Capital Assets	21.06	68.67	-	6.41	83.32	83.32	0.65	-	3.23	80.75	80.75		80.75	83.32	0.65	-	3.23	80.75	
2	Grant Towards Cost Of Capital Assets / Promoter's Contribution*	**2,163.75**	**216.91**	**1,951.14**	**3.05**	**426.47**	**426.47**	-	134.40	-0.55	288.72	288.72		288.72	426.47	0	134.40	-0.55	288.72	**245.04**
	(a) Grant From GOA	806.11	79.91	747.71	0.55	137.76	**137.76**	-	134.40	-0.55	-0.00	-0.00		-0.00	137.76	0	134.40	-0.55	-0.00	144.38
	(b) Grant From ADB/AIIB	966.86	-	966.86	-	-	-	-	-	-	-	-		-	-	0	-	-	-	100.66
	(c) Grant From Central Government	390.78	137.00	236.56	2.50	288.72	**288.72**	-	-	-	288.72	288.72		288.72	288.72	0	-	-	288.72	0.00
		2,184.81	**285.58**	**1,951.14**	**9.46**	**509.79**	**509.79**	**0.65**			369.46	**369.46**		**369.46**	**509.79**	**0.65**	-		**369.46**	**245.04**

Form - F26

Non-Tariff Income

Rs. Crore

S.No.	Particulars	FY 22-23 True Up		FY 23-24 APR				FY 24-25
		True up		APR				ARR
		Approved in Order dtd 21.03.22	AEGCL Submission	Approved in Order dtd 29.03.23	FY 23-24 H1	FY 23-24 H2	Total AEGCL Submission	AEGCL Submission
A	**Income from Investment, Fixed & Call Deposits**							
	Income from Investments		0.51		-	0.50	0.50	0.50
	Interest on fixed deposits		50.84		28.60	17.04	45.64	45.64
	Interest from Banks		2.26		1.52	0.30	1.82	1.82
	Interest on GPF		-1.60		-1.43	-0.80	-2.23	-2.23
	Sub Total		**52.00**		**28.68**	**17.04**	**45.72**	**45.72**
B	**Other Non-Tariff Income**						-	
	Rental from contractors/others		0.66		0.05	0.05	0.10	
	Inspection Bunglow/Guest house charges		0.03		0.02	0.02	0.04	
	Electricity charges from employees		0.00		0.00	0.00	0.00	
	Sale of tender forms		0.07		0.02	0.02	0.04	
	Penalties recovered from suppliers/contractors		1.71		0.23		0.23	
	Other Miscellaneous Receipt				0.60		0.60	
	Hire Charges from Contractors/Suppliers/Others				0.08			
	Income from Supervision/Service charges on deposit works	54.01	21.55	58.45	17.42	3.00	20.42	
	Stale Cheque entry taken as income since not reissued		0.24				-	**21.48**
	Testing bills raised against testing of transformer, circuit breaker, etc.		0.42				-	
	against POSOCO for security guards enchanced monthly remuneration		0.10				-	
	Income received from APGCL for repairing of transformer, etc.		0.20				-	
	Hire Charges from Contractors/Suppliers/Others		0.02				-	
	Sale of scrap		1.34			-	-	
	Rentals from staff quarters		0.13			-	-	
	Deposit forfeited		0.02				-	
	Sub-Total		**26.50**		**18.42**	**3.09**	21.51	
	Total	**54.01**	**78.50**	**58.45**	**47.10**	**20.13**	**67.23**	**67.20**

Form - F23

Return on Equity (Rs. Crore)

S.No.	Particulars	Units	FY 22-23 True Up		FY 23-24 APR		FY 24-25
			True up		APR		ARR
			Approved in Order dtd 21.03.22	AEGCL Submission	Approved in Order dtd 29.03.23	Total AEGCL Submission	AEGCL Submission
1	Equity (Opening Balance)	Rs. Crore	99.93	99.93	827.01	876.80	920.57
2	Net additions during the year	Rs. Crore	2.78	776.87		43.77	-
3	Less : Reduction during the year	Rs. Crore	0	-	0.00	-	-
4	**Equity (Closing Balance)**	**Rs. Crore**	**102.71**	**876.80**	827.01	**920.57**	**920.57**
5	**Average Equity**	**Rs. Crore**	**101.32**	**488.36**	**827.01**	**898.68**	**920.57**
6	Rate of Return on Equity	%	13.50%	15.50%	13.50%	13.50%	13.50%
7	**Return on Equity**	**Rs. Crore**	**13.68**	**75.70**	**111.65**	**121.32**	**124.28**

SBI MCLR Rate FY 2022-23

Effective Date	Interest Rate (%) (1Yr)

Effective Date	1 Year
15-03-2023	8.50
15-02-2023	8.50
15-01-2023	8.40
15-12-2022	8.30
15-11-2022	8.05
15-10-2022	7.95
15-09-2022	7.70
15-08-2022	7.70
15-07-2022	7.50
15-06-2022	7.40
15-05-2022	7.20
15-04-2022	7.10
Average	7.86

FY 2023-24 **Form 35**

Effective Date	Interest Rate (%) (1Yr)

Effective Date	1 Year
15-10-2023	8.55
15-09-2023	8.55
15-08-2023	8.55
15-07-2023	8.55
15-06-2023	8.50
15-05-2023	8.50
15-04-2023	8.50
Average	**8.53**

Conversion of Grant and Loan to Equity **Form - 33**

Grant & Loan as on 31.03.21

			Total		AEGCL		SLDC	
	Rs. in Cr	**Conversion to Equity**	**Loan**	**Equity**	**Loan**	**Equity**	**Loan**	**Equity**
			70%	**30%**	**70%**	**30%**	**70%**	**30%**
Grant	1955.05	**1955.05**	**1368.54**	**586.52**	**1365.80**	**585.34**	**2.74**	**1.17**
Loan		**638.41**	**446.89**	**191.52**	446.89	191.52		
ADB Loan	95.68	95.68	66.98	28.70	66.98	28.70		
GoA Loan	542.73	542.73	379.91	162.82	379.91	162.82		
Total	**2593.46**	**2593.46**	**1815.42**	**778.04**	**1812.69**	**776.87**	**2.74**	**1.17**

Contingency Reserve

Form - 34
(Rs. Crore)

Sl. No	Particulars	Approved in TO dated 21.03.22	FY 2022-23	FY 2023-24	FY 2024-25
1	Opening GFA for the current year	2708	2,732.21	3,022.08	4,031.70
2	% Factor	0.10%	0.10%	0.10%	0.10%
3	**Contingency Reserves (1*2)**	**2.71**	**2.73**	**3.02**	**4.03**

Annexure – I
Audited Annual Accounts
FY 2022-23

IND AS FINANCIAL STATEMENT

2022-23

ASSAM ELECTRICITY GRID CORPORATION LIMITED.
CIN: U40101AS2003GC007238
(A Public Sector Undertaking)
[Registered Office: Bijulee Bhawan, Paltan Bazar, Guwahati – 781001]

Assam Electricity Grid Corporation Limited

Balance Sheet as at March 31, 2023

(Rs. In Lakh)

Particulars	Notes	As at March 31, 2023	As at March 31, 2022 Restated	As at April 1, 2021 Restated
Assets				
(I) Non-current assets				
(a) Property, plant and equipment	3a	1,34,970.27	1,36,901.74	1,37,569.34
(b) Right of use assets	3b	23.49	24.39	25.29
(c) Capital work in progress	4	75,949.31	62,864.56	57,104.14
(d) Financial assets				
(i) Investments	5	5,348.20	5,348.20	5,348.20
(ii) Other financial assets	6	48,083.88	8,875.33	2,548.40
(e) Other non-current assets	7	7,507.15	7,272.94	957.10
Total non-current assets		**2,71,882.30**	**2,21,287.16**	**2,03,552.47**
(II) Current assets				
(a) Inventories	8	3,289.68	2,337.64	2,384.39
(b) Financial assets				
(i) Trade receivables	9	14,523.55	14,698.18	14,761.45
(ii) Cash and cash equivalents	10	15,231.59	13,140.84	10,669.03
(iii) Bank balances other than cash and cash equivalents	11	60,244.34	89,418.55	87,274.89
(iv) Loans	12	117.81	99.69	97.14
(v) Other financial assets	13	10,527.37	10,528.17	10,526.94
(c) Current tax assets (net)	14	2,583.72	2,648.74	2,676.24
(d) Other current assets	15	31,474.74	29,983.28	28,231.86
Total current assets		**1,37,992.80**	**1,62,855.09**	**1,56,621.94**
Total assets		**4,09,875.10**	**3,84,142.25**	**3,60,174.41**
Equity and liabilities				
(1) Equity				
(a) Equity share capital	16	2,69,338.56	9,993.19	9,993.19
(b) Other equity	17	(15,036.48)	1,75,226.67	1,68,666.56
Total equity		**2,54,302.08**	**1,85,219.86**	**1,78,659.75**
(2) Liabilities				
(I) Non-current liabilities				
(a) Grants	18	50,588.43	22,648.62	221.00
(b) Financial liabilities				
Borrowings	19	3,232.86	67,380.04	28,492.41
(c) Provisions	20	1,803.05	678.86	303.45
(d) Deferred tax liabilities (net)		-	-	-
Total non-current liabilities		**55,624.34**	**90,707.52**	**29,016.86**
(II) Current liabilities				
(a) Financial liabilities				
(i) Borrowings	21	87.90	-	38,865.72
(ii) Trade payables	22			
(a) Total outstanding dues of micro enterprises and small enterprises		-	-	-
(b) Total outstanding dues of creditors other than micro enterprises and small enterprises		16,896.60	16,896.60	16,896.92
(iii) Other current financial liabilities	23	49,954.09	61,190.15	71,432.51
(b) Other current liabilities	24	29,051.45	27,353.17	22,809.46
(c) Provisions	25	3,958.64	2,774.95	2,493.19
(d) Current tax liability (net)	26	-	-	-
Total current liabilities		**99,948.68**	**1,08,214.87**	**1,52,497.80**
Total liabilities		**1,55,573.02**	**1,98,922.39**	**1,81,514.66**
Total equity and liabilities		**4,09,875.10**	**3,84,142.25**	**3,60,174.41**
Summary of significant accounting policies	1-2			
The accompanying notes are an integral part of the financial statements	3-44			

As per our report of even date
For

ICAI Firm Registration No.:
Chartered Accountants

CA
Partner
Membership No.:

Place: Guwahati
Date:

UDIN: 23413362BGYSRB3506

For R. M. KOTHARI & CO.
Chartered Accountants
(Prateek Kothari)
PARTNER
M. No. 413362
08-09-2023

For and on behalf of the Assam Electricity Grid Corporation Limited

(D.Das)
Managing Director
DIN-09702957

(P.K. Barman)
CGM (F&A)
PAN
:AETPB6712P

(N K Baishya)
Independent Director
DIN-09230144

(D. Barua)
Company Secretary
Membership No. :
FCS-4033

0001

Statement of Profit and Loss for the year ended March 31, 2023

(Rs. In Lakh)

Particulars	Notes	For the year ended March 31, 2023	For the year ended March 31, 2022 Restated
Income:			
Revenue from operations	27	44,225.97	37,827.89
Other income	28	20,597.95	16,038.17
Total income		**64,823.92**	**53,866.06**
Expenses:			
Employee benefits expense	29	18,101.36	16,914.83
Depreciation and amortization expense	3a	13,093.25	12,744.09
Finance costs	30	204.26	209.57
Other expenses	31	29,311.67	18,726.33
Total expenses		**60,710.54**	**48,594.82**
Profit before exceptional items and tax		**4,113.38**	**5,271.24**
Exceptional items			-
Profit before tax		4,113.38	5,271.24
Tax expense			
Current tax		-	-
Deferred tax		-	-
Profit for the period		**4,113.38**	**5,271.24**
Other comprehensive income			
Items that will not be reclassified to profit or loss			
Re-measurement gains/(losses) on defined benefit plan		-	-
Income tax effect		-	-
Other comprehensive income		-	-
Total comprehensive income		**4,113.38**	**5,271.24**
Earnings per equity share of face value of Rs.100 each :			
Basic (In Rs.)		1.53	52.75
Diluted (In Rs.)		1.53	52.75

The accompanying notes are an integral part of the financial statements

As per our report of even date

For

ICAI Firm Registration No.:
Chartered Accountants

CA
Partner
Membership No.:

Place: Guwahati
Date:
UDIN: 23413362BGYSRB3506

For and on behalf of the Assam Electricity Grid Corporation Limited

(D.Das)
Managing Director
DIN-09702957

(N K Baishya)
Independent Director
DIN-09230144

(P.K. Barman)
CGM (F&A)
PAN
:AETPB6712P

(D. Barua)
Company Secretary
Membership No. :
FCS-4033

For R. M. KOTHARI & CO.
Chartered Accountants
(Prateek Kothari)
PARTNER
M. No. 413362
08-09-2023

0002

Statement of changes in equity for the year ended March 31, 2023

A Equity share capital **(Rs. In Lakh)**

(1) Current reporting period

Balance at the beginning of the current reporting period	Changes in equity share capital due to prior period errors	Restated balance at the beginning of the current reporting period	Changes in equity share capital during the current year	Balance at the end of the current reporting period
9,993.19	-	9,993.19	2,59,345.37	2,69,338.56

(2) Previous reporting period **(Rs. In Lakh)**

Balance at the beginning of the current reporting period	Changes in equity share capital due to prior period errors	Restated balance at the beginning of the current reporting period	Changes in equity share capital during the current year	Balance at the end of the current reporting period
9,993.19	-	9,993.19	-	9,993.19

B Other equity **(Rs. In Lakh)**

Particulars	Reserve & surplus					Item of Other Comprehensive Income	Total other equity
	Other Equity	Other Reserve	Retained Earnings	Contingency Reserve	Self Insurance Reserve		
Balance as April 1, 2021	1,95,504.60	14,410.54	(41,859.40)			-	1,68,055.74
Changes due to prior period error			115.15		495.67	-	610.82
Restated balance as at April 1, 2021	**1,95,504.60**	**14,410.54**	**(41,744.25)**	**-**	**495.67**	**-**	**1,68,666.56**
Profit/(loss) for the year			5,271.24				5,271.24
Addition during the year		1,015.10			273.77		1,288.87
Other comprehensive income						-	-
Balance as at March 31, 2022	**1,95,504.60**	**15,425.64**	**(36,473.01)**	**-**	**769.44**	**-**	**1,75,226.67**
Profit/(loss) for the year			4,113.38				4,113.38
Addition during the year		663.25		218.30	246.52		1,128.07
Conversion to equity shares	(1,95,504.60)						(1,95,504.60)
Other comprehensive income						-	-
Balance as at March 31, 2023	**-**	**16,088.89**	**(32,359.63)**	**218.30**	**1,015.96**	**-**	**(15,036.48)**

B.1 Other equity Includes:- **(Rs. In Lakh)**

	As at 01-04-2021
(a) Grant From GOA	75162.10
(b) Grant From ADB	96686.02
(c) Grant From Central Government	23656.48

The accompanying notes are an integral part of the financial statements

As per our report of even date
For
ICAI Firm Registration No.:
Chartered Accountants

CA
Partner
Membership No.:

For R. M. KOTHARI & CO.
Chartered Accountants
(Prateek Kothari)
PARTNER
M. No. 413362
08-09-2023

Place: Guwahati
Date:
UDIN:
23413362BGYSRB3506

For and on behalf of the Assam Electricity Grid Corporation Limited

(D.Das)
Managing Director
DIN-09702957

(P.K. Barman)
CGM (F&A)
PAN :AETPB6712P

(N K Baishya)
Independent Director
DIN-09230144

(D. Barua)
Company Secretary
Membership No. : FCS-4033

0003

Cash Flow Statement for the year ended March 31, 2023

(Rs. In Lakh)

Particulars	For the year ended 31 March 2023	For the year ended 31 March 2022 (Restated)
Profit before tax	4,113.38	5,271.24
Adjustments for:		
Depreciation and amortisation	13,711.16	12,962.14
Interest expenses	204.26	209.57
Income from Investment	(55.74)	(117.56)
Interest on Fixed Deposits with Banks	(5,083.69)	(4,664.68)
Interest from Banks	(226.36)	(121.47)
Dividend from Investment	(909.19)	(534.82)
Operating profit before working capital changes	**11,753.82**	**13,004.42**
Movement in working capital		
(Increase)/decrease in trade receivables	174.63	63.26
(Increase)/decrease in bank balances other than cash and cash	29,174.21	(2,143.66)
(Increase)/decrease in inventories	(952.04)	46.75
(Increase)/decrease in loans and other financial assets	(17.32)	(3.77)
(Increase)/decrease in other current assets	(1,491.46)	(1,751.42)
(Increase)/decrease in financial assets non-current	(39,208.55)	(6,326.93)
(Increase)/decrease in other non-current assets	(60.67)	(9.25)
Increase/(decrease) in trade payables	-	(0.32)
Increase/(decrease) in other current financial liabilities	(11,236.05)	(10,242.36)
Increase/(decrease) in other current liabilities	1,698.29	4,543.71
Increase/(decrease) in long term borrowings		
Increase/(decrease) in short term borrowings	-	-
Increase/(decrease) in long term provisions	1,124.19	375.41
Increase/(decrease) in short term provisions	1,183.69	281.76
Cash generated from/(used in) operations	**(7,857.26)**	**(2,162.40)**
Direct taxes paid (net of refunds)	65.02	27.50
Net cash generated from/(used in) operating activities	**(7,792.24)**	**(2,134.90)**
Cash flow from investing activities		
Purchase of property, plant & equipment including cwip and capital advances	(25,037.10)	(24,359.65)
Income from Investment	55.74	117.56
Dividend from Investment	909.19	534.82
Interest Income	5,310.05	4,786.15
Net cash (used in)/generated from investing activities	**(18,762.12)**	**(18,921.12)**
Cash flow from financing activities		
Changes in equity	64,968.84	1,288.87
Conversion of borrowing to equity	(63,840.76)	-
Proceeds receipts /repayment from borrowings	(218.52)	20.91
Proceeds from Grant towards capital assets	27,939.81	22,427.62
Interest paid	(204.26)	(209.57)
Net cash (used in)/generated from financing activities	**28,645.11**	**23,527.83**
Net (decrease) / increase in cash and cash equivalents	**2,090.75**	**2,471.81**
Cash and cash equivalents at the beginning of the year	**13,140.84**	**10,669.03**
Cash and cash equivalents at the end of the year	**15,231.59**	**13,140.84**
Components of cash and cash equivalents		
Cash and cheques on hand	136.26	135.32
Balances with banks:		
- On current accounts	15,095.33	13,005.52
-In deposit accounts (with original maturity less than three months)	-	-
(refer note 10)	**15,231.59**	**13,140.84**

Notes:
The cash flow statement has been prepared under the indirect method as set out in the Ind AS 7 "Statement of Cash Flows".

As per our report of even date
For
ICAI Firm Registration No.:
Chartered Accountants

CA
Partner
Membership No.:

Place: Guwahati
Date:

UDIN: 23413362BGYSRB3506

(D.Das)
Managing Director

DIN-09702957

(P.K. Barman)
CGM (F&A)
PAN :AETPB6712P

(N K Baishya)
Independent Director

DIN-09230144

(D. Barua)
Company Secretary
Membership No. :
FCS-4033

For R. M. KOTHARI & CO.
Chartered Accountants
(Prateek Kothari)
PARTNER
M. No. 413362
08-09-2023

Assam Electricity Grid Corporation Limited

Notes forming part of Financial Statements

Note.1

A. Corporate and General Information

Assam Electricity Grid Corporation Limited ('the Company') is a State Public Sector Company domiciled and incorporated in India under the provisions of The Companies Act, 1956. The registered office of the Company is situated at Bijulee Bhawan (First Floor), Paltan Bazar, Guwahati 781001, It was formed out of erstwhile Assam State Electricity Board (ASEB) in 2003 and was notified as the State Transmission Utility (STU). Its core business is to efficiently transport electrical power from electrical power bulk heads to the distribution company networks in the state of Assam. Assam Electricity Grid Corporation Limited inherited 3862 circuit kms of EHV lines above 66 kV voltage class and 38 numbers of EHV sub-stations having a total transformation capacity of 1636.50 MVA at its birth in 2003.

B. Basis of Preparation of Financial Statements

Statement of compliance

The financial statements are prepared in accordance with Indian Accounting Standards (Ind AS) notified under Section 133 of the Companies Act, 2013 (the Act), Companies (Indian Accounting Standards) Rules, 2015 the subsequent amendments thereto and the relevant provisions of the Companies Act, 2013 and the provisions of the Electricity Act, 2003 to the extent applicable and various regulations and policies framed there under by the appropriate authorities.

The financial statements upto year ended 31 March 2022 were prepared in accordance with generally accepted accounting principles in India, the relevant provisions of the Companies Act, 2013 including Accounting Standards notified there under and the provisions of the Electricity Act, 2003 to the extent applicable. These financial statements are the first financial statements of the Company under Ind AS. The date of transition to Ind AS is April 01, 2021. Refer Note No. 42 for an explanation of how the transition from previous GAAP to Ind AS has affected the Company's financial position, financial performance and cash flows.

Basis of preparation and presentation

The financial statements have been prepared on a historical cost basis, except for certain financial assets and liabilities (refer accounting policy no 2.5) regarding financial instruments which have been measured at fair value.

Functional and presentation currency

The Financial statements are presented in Indian Rupees (INR), which is the Company's functional and presentation currency and all amounts are rounded to the nearest lakhs and two decimals thereof, except as stated otherwise.

Significant Accounting Judgements, Estimates and Assumptions

The preparation of financial statements in conformity with Ind AS requires the Company's management to make judgements, estimates and assumptions about the carrying amounts of assets and liabilities recognised in the financial statements that are not readily apparent from other sources. The judgements, estimates and associated assumptions are based on historical experience and other factors including estimation of effects of uncertain future events that are considered to be relevant. Actual results may differ from these estimates.

The following are the critical judgements, estimations & assumptions that have been made by the management in the process of applying the Company's accounting policies.

- Management uses judgement in deciding whether individual item or group of items are material in the financial statements. Materiality is judged by reference to the size and nature of the item. The deciding factor is whether omission or misstatement could individually or collectively influence the economic decision that users make on the basis of the financial statements.
- Tax expense is calculated using applicable tax rate and laws that have been enacted or substantially enacted. In arriving at taxable profit and all tax bases of assets and liabilities, the Company determines the taxability based on tax enactments, relevant judicial pronouncements and tax expert opinions and makes appropriate provisions which includes an estimation of the likely outcome of any open tax assessments / litigations. Any difference is recognised on closure of assessment or in the period in which they are agreed.

R. M. KOTHARI & CO. FRN 000143C Chartered Accountants 0005

- When the fair value of financial assets and financial liabilities recorded in these financial statements cannot be measured based on quoted price in active markets, their fair value is measured using valuation techniques. The inputs to these valuation techniques are taken from observable markets where possible, but where this is not feasible, a degree of judgement is required in establishing fair values. Judgements include consideration of inputs such as liquidity risk, credit risk and volatility etc.
- The Company makes allowances for doubtful trade receivables (Expected Credit Loss Allowance) based on a provision matrix which takes into account historical credit loss experience and adjusted for current estimates.
- The determination of depreciation and amortisation charge depends on the useful lives for which judgements and estimations are required. The residual values, useful lives, and method of depreciation/amortisation of property, plant and equipment and intangible assets are reviewed at each financial year end and adjusted prospectively, if appropriate.
- Inventories are stated at the lower of cost and net realisable value. In estimating the net realisable value of inventories the Company makes an estimate of future selling prices and costs necessary to make the sale.
- Management judgement is required for estimating the possible outflow of resources, if any, in respect of contingencies / claims / litigations against the Company as it is not possible to predict the outcome of pending matters with accuracy.
- The Company evaluates if an arrangement qualifies to be a lease as per the requirements of Ind AS 116 "Leases". Identification of a lease requires significant judgment in assessing the lease term (including anticipated renewals) and the applicable discount rate.

Current and non-current classification

The Company presents assets and liabilities in the balance sheet on current/non-current classification which is based on the principles and definitions set out in the Schedule III of the Companies Act 2013 as amended. An asset is current when it is:

• Expected to be realized or intended to be sold or consumed in normal operating cycle;

• Held primarily for the purpose of trading;

• Expected to be realized within twelve months after the reporting period; or

• Cash or cash equivalent unless restricted from being exchanged or used to settle a liability for at least twelve month after the reporting period.

All other assets are classified as non-current.

A liability is current when:

• It is expected to be settled in normal operating cycle;

• It is held primarily for the purpose of trading;

• It is due to be settled within twelve months after the reporting period;

• There is no unconditional right to defer settlement of the liability for at least twelve months after the reporting period.

All other liabilities are classified as non-current.

Deferred tax assets/liabilities are classified as non-current.

The Company recognizes twelve months period as its operating cycle.

R. M. KOTHARI & CO. FRN 000143C Chartered Accountants

0006

Assam Electricity Grid Corporation Limited

Significant Accounting Policies

Note 2.

C. Summary of significant accounting policies

2.1Property, plant and equipment (PPE) and intangible assets

The Company has opted to consider the carrying value of Property, Plant and Equipment as per previous GAAP on the date of transition to Ind AS (1st April, 2021) to be the deemed cost as per Ind AS 101 'First time Adoption of Indian Accounting Standards'.

Initial Recognition and Measurement

Property, Plant and Equipment is initially measured at cost of acquisition/construction including any costs directly attributable to bringing the asset to the location and condition necessary for it to be capable of operating in the manner intended by management. After initial recognition, Property, Plant and Equipment is carried at cost less accumulated depreciation / amortisation and accumulated impairment losses, if any.

Property, Plant and Equipment acquired as replacement of the existing assets are capitalized and its corresponding replaced assets removed/ retired from active use are derecognized. If the cost of the replaced part or earlier inspection component is not available, the estimated cost of similar new parts/ inspection component is used as an indication of what the cost of the existing part/ inspection component was when the item was acquired or inspection was carried out.

In the case of commissioned assets, deposit works/cost- plus contracts where final settlement of bills with contractors is yet to be effected, capitalization is done on provisional basis subject to necessary adjustments in the year of final settlement.

Assets and systems common to more than one transmission system are capitalized on the basis of technical estimates/ assessments.

Transmission system assets are considered as ready for intended use from the date of commercial operation declared in terms of AERCTariff Regulations and capitalized accordingly.

Subsequent costs

Subsequent expenditure is recognized as an increase in carrying amount of assets when it is probable that future economic benefits deriving from the cost incurred will flow to the company and cost of the item can be measured reliably. The costs of the day-to-day servicing of property, plant and equipment are recognised in the Statement of Profit & Loss as incurred.

Derecognition

An item of Property, Plant and Equipment is derecognized when no future economic benefits are expected from their use or upon their disposal. The gain or loss arising on the disposal or retirement of an item of property, plant and equipment is determined as the difference between the net disposal proceeds and the carrying amount of the asset and is recognised in the Statement of Profit and Loss on the date of disposal or retirement.

Capital Work-In-Progress (CWIP)

Cost of material, erection charges and other expenses incurred for the construction of Property, Plant and Equipment and incidental expenditure incurred during construction of projects are shown under capital work in progress and allocated on a systematic basis to the cost of the related assets on completion of the projects.

2.2 Intangible Assets

Intangible assets are recognized when the entity controls the asset, it is probable that future economic benefits attributed to the asset will flow to the entity and the cost of the asset can be reliably measured.

At initial recognition, the separately acquired intangible assets are recognised at cost. Intangible assets with finite useful lives are carried at cost less accumulated amortisation and accumulated impairment losses, if any.

Intangible assets are amortised over the useful economic life and assessed for impairment whenever there is an indication that the intangible asset may be impaired. The amortisation period and the amortisation method for an intangible asset are reviewed at least at the end of each financial year. Changes in the expected useful life or the expected pattern of consumption of future economic benefits embodied in the asset are considered to modify the

R.M. KOTHARI & CO. FRN 000143C Chartered Accountants

0007

amortisation period or method, as appropriate, and are treated as changes in accounting estimates. The amortisation expense on intangible assets is recognised in the Statement of Profit and Loss unless such expenditure forms part of carrying value of another asset.

Gains or losses arising from de-recognition of an intangible asset are measured as the difference between the net disposal proceeds and the carrying amount of the asset and are recognised in the Statement of Profit and Loss when the asset is de-recognised.

2.3 Depreciation / Amortization

Depreciation is provided as per Schedule II of the Companies Act 2013, Part 'B' of this schedule states that " The useful life or residual value of any specific asset, as notified for accounting purposes by a Regulatory Authority constituted under an Act of parliament or by the Central Government shall be applied in calculating the depreciation to be provided for such asset irrespective of the requirements of this Schedule". As such depreciation has been provided at the rates specified in Appendix-I to Assam Electricity Regulatory Commission (Terms and Conditions for determination of Multi Year Tariff) Regulations, 2021 on Straight Line Method subject to a maximum of 90% of the original cost of the asset. Rates of depreciation are shown in the following table:

Assets	Depreciation Rate
Land Owned under full title	0.00%
Land held under lease	3.34%
APDRP Land	0.00%
Building containing transmission installations	3.34%
Office Building	3.34%
Temporary erections such as wooden structures	100.00%
APDRP building	3.34%
Other Buildings	3.34%
Cooling Water System	5.28%
Cooling Tower & Circulating Water System	5.28%
Sweet water arrangement including reservoirs, etc.	5.28%
Plant and Pipeline for water supply in residential colony	5.28%
Drainage & sweage residential colony	5.28%
Other Roads	3.34%
APDRP Other Civil Works	3.34%
Miscellaneous Civil Works	3.34%
Transformers	5.28%
Other plant & equipment	5.28%

R.M. KOTHARI & CO. FRN 000143C Chartered Accountants

0008

Material handling equipment-earth movers, bulldozers	5.28%
Material handling equipment-cement mixers	5.28%
Material handling equipment-cranes	5.28%
Material handling equipment-others	5.28%
Switch-gear including cable connections	5.28%
Batteries including charging equipments	18.00%
Fabrication shop/work-shop Plant & Equipment	5.28%
Lightning Arrestors (Pole Type)	5.28%
Lightning Arrestors (Station Type)	5.28%
Communication Equipment-Radio & High Frequency carrier system	6.33%
Communication Equipment-Telephone Lines & Telephones	6.33%
Static machine tools & equipments	5.28%
Air Conditioning plant static	5.28%
Air Conditioning plant portable	9.50%
Meter testing laboratory tools & equipment	5.28%
Equipment in hospital/clinics	5.28%
Tools & Tackles	5.28%
Show-room equipment	5.28%
Other miscellaneous equipment	5.28%
Over-head lines(towers, poles, fixtures, overhead conductors & devices) - lines on fabricated steel supports operating at nominal voltages higher than 66KV	5.28%
Over-head lines(towers, poles, fixtures, overhead conductors & devices) - lines on fabricated steel supports operating at nominal voltages from 13.2 KV to 66 KV	5.28%
Over-head lines(towers, poles, fixtures, overhead conductors & devices) - lines on reinforced concrete supports/steel supports-11 KV and above	5.28%

R.M. KOTHARI & CO. FRN 000143C Chartered Accountants

0009

Over-head lines(towers, poles, fixtures, overhead conductors & devices) - lines on treated wood supports	5.28%
Up gradation transmission & distribution network(33 to 66)	5.28%
Underground cables including joint boxes & disconnecting boxes-11KV	5.28%
Underground cables-cable duct systems	5.28%
Metering equipment	5.28%
Miscellaneous Equipments	5.28%
Trucks	9.50%
Jeeps. Trekkers & Motor Cars	9.50%
Other Vehicles	9.50%
Furniture & Fixtures	6.33%
Electrical wiring, Light & Fan Installations	6.33%
Others	6.33%
Calculators	6.33%
Typewriters	6.33%
Cash Registers in Cash Offices	6.33%
Refrigerators & water coolers	6.33%
Telephone & EPABX	6.33%
Computers	15.00%
Other Office Equipment	6.33%

2.4 Inventories

Inventories of stores and spares as at the end of the year are valued at cost.

2.5 Financial Instruments

Financial assets and financial liabilities are recognised when a Company becomes a party to the contractual provisions of the instruments.

R. M. KOTHARI & CO. FRN 000143C Chartered Accountants

Financial Assets

Initial Recognition and Measurement

All financial assets are recognised initially at fair value plus, in the case of financial assets not recorded at fair value through profit or loss, transaction costs that are attributable to the acquisition of the financial assets. These include trade receivables, cash & cash equivalents, bank balances other than cash & cash equivalents and other financial assets.

Classification and Subsequent Measurement

Financial assets are subsequently measured at amortised cost or fair value through other comprehensive income or fair value through profit or loss depending on its business model for managing those financial assets and the asset contractual cash flow characteristics.

Financial Assets at Amortised Cost

A financial asset is subsequently measured at amortised cost if it is held within a business model whose objective is to hold the asset in order to collect contractual cash flows and the contractual terms of the financial asset give rise on specified dates to cash flows that are solely payments of principal and interest on the principal amount outstanding.

Financial Assets at Fair Value through Other Comprehensive Income

A financial asset is subsequently measured at fair value through other comprehensive income if it is held within a business model whose objective is achieved by both collecting contractual cash flows and selling financial assets and the contractual terms of the financial asset give rise on specified dates to cash flows that are solely payments of principal and interest on the principal amount outstanding.

Financial Assets at Fair Value through Profit or Loss

A financial asset which is not classified in any of the above categories is subsequently fair valued through profit or loss.

Derecognition

The Company derecognises a financial asset only when the contractual rights to the cash flows from the asset expires or it transfers the financial asset and substantially all the risks and rewards of ownership of the asset to another entity and does not retain control of the asset.

Impairment of Financial Assets

Financial assets, other than those at fair value through profit or loss, are assessed for indicators of impairment at the end of each reporting period. The Company recognises a loss allowance for expected credit losses on financial asset. In case of trade receivables, the Company follows the simplified approach permitted by Ind AS 109 "Financial Instruments" for recognition of impairment loss allowance. The application of simplified approach does not require the Company to track changes in credit risk. The Company calculates the expected credit losses on trade receivables using a provision matrix on the basis of its historical credit loss experience.

Financial Liabilities

Initial Recognition and Measurement

Financial liabilities include borrowings, lease liability and trade payables etc.

All financial liabilities are recognised initially at fair value and in the case of borrowings and trade payables, net of directly attributable transaction costs.

Classification and Subsequent Measurement

The financial liabilities are classified as either 'financial liabilities at fair value through profit or loss' or 'financial liabilities at amortised cost.

Financial liabilities at Fair Value through Profit or Loss

Financial liabilities are classified at fair value through profit or loss when the financial liability is held for trading or are designated upon initial recognition as fair value through profit or loss. It includes derivative financial instruments entered into by the Company that are not designated as hedging instruments in hedge relationships. All changes in the fair value of such liability are recognised in the statement of profit and loss.

R. M. KOTHARI & CO. FRN 000143C Chartered Accountants

0011

Financial liabilities at Amortised Cost

Other financial liabilities (including borrowings and trade payables etc.) are subsequently measured at amortised cost using effective interest method.

Derecognition

A financial liability is derecognised when the obligation under the liability is discharged or cancelled or expired. Any gain or loss arising on derecognition is included in the statement of profit and loss when the liability is derecognised.

Offsetting

Financial assets and financial liabilities are offset and the net amount presented in the balance sheet when, and only when, the Company currently has a legally enforceable right to set off the amounts and it intends either to settle them on a net basis or to realise the asset and settle the liability simultaneously.

Derivative Financial Instruments

Derivative financial instruments are such as forward contracts, currency and interest rate swaps to hedge its foreign currency and interest rate risks. Such derivative financial instruments are initially recognised at fair value on the date on which a derivative contract is entered into and are subsequently remeasured at fair value.

Derivatives are carried as financial assets when the fair value is positive and as financial liabilities when the fair value is negative.

Any gains or losses arising from changes in the fair value of derivatives are taken to statement of profit and loss.

2.6 Revenue Recognition

Revenue from Contracts with Customers

a) Revenue from contract with customers is recognized when control of the goods or services are transferred to the customer at an amount that reflects the consideration to which the Company expects to be entitled in exchange for those goods or services.

b) Recognition of revenue is postponed due to the effect of uncertainties of ultimate collection, and revenue is recognized in the period when such uncertainties cease to exist.

Revenue is measured at the fair value of the consideration received or receivable. Amounts disclosed as revenue are net of returns, trade allowances, rebates and value added taxes.

Transmission Income is accounted for based on tariff orders notified by the AERC. In case of transmission projects where final tariff orders are yet to be notified, transmission income is accounted for as per tariff regulations and orders of the AERC in similar cases. Difference, if any, is accounted on issuance of final tariff orders by the AERC. The company has recognised revenue in books of accounts as stated below:

Other Revenue Recognition

a) Interest income is recognized on a time proportion basis taking into account the amount outstanding and the interest rate applicable using Effective Interest rate Method.

b) Dividend will be recognized when the entities right to receive payment is established, economic benefit will flow to the entity and amount can be measured reliably.

c) Other income such as rent & hire charges, sale of scrap and Miscelleneous Income are accounted for on accrual basis.

R. M. KOTHARI & CO. FRN 000143C Chartered Accountants

2.7 Employee Benefits

Pursuant to the Transfer Scheme, the Government of Assam (GoA) vide its Notification No.PEL.190/2004/69 dated 4th February, 2005 notified a plan for meeting out the terminal benefit obligations of personnel so transferred from ASEB to successor entities. As per Clause 1.5 of the said notification, "Terminal Benefit" means the ASEB's employee related liabilities including payment of pension, gratuity, leave encashment and General Provident Fund and any other retirement benefits and other applicable benefits including right to appropriate revisions in the above benefits consistent with the practice that were prevalent in ASEB. Accounting for Retirement Benefits in the Financial Statements of Employers-Provision for Pension, Gratuity and Leave Salary Encashment have been provided as per actuarial valuation under Ind AS-19 but provided as per GOA's notification.

(a) Funding for past-unfunded terminal liabilities shall be on the basis of actuarial valuation done as at 9th December 2004 and 4th May 2019. In respect of cash outflows towards past-unfunded liabilities of existing employees, existing pensioners and existing family pensioners, funding pattern will be guided by the aforesaid Government notification.

(b) Funding for future services-Terminal Benefits:

The Corporation makes a provision for terminal benefits liability for future service of its permanent employees joining in the service before 01.01.2004 @ 33.50% of Basic Pay plus Dearness Allowance as per AERC and in the line with the GoA's Notification mentioned above arid Board's approval of Item No. 9 dated 22.01.2021.

(c) Leave Encashment benefit (LEB) of employees:

Leave encashment benefits of the old employees are accounted for on cash basis and the claim for recovery of the appropriate share of such amount, i.e., share of past liability relating to period prior to 01.04.2005 is forwarded to the pension trust authorities as per GoA's Notification mentioned here-in-above.

(d) GPF deductions/payments of employees:

Payment on account of GPF (Final Withdrawal and Non-refundable advance) to the existing employees is being made from the GPF Account of the Corporation. Claim for recovery of appropriate share of such fund, i.e., share of past-unfunded liability is also forwarded to the Pension Trust authorities as per GoA Notification mentioned here in above.

Provision for interest payable on GPF is made @ 7.10 % per annum on the opening balance and the average subscription of the employees during the year.

(e) Terminal benefit for new employees (appointed on or after 1.1.2004):

New pension Scheme is being implemented for the new employees of the Corporation as per Government of India Notification No.5/7 /2003-ECB & PR dated 22.12.2003.

2.8 Accounting for Government Grants

Grants and subsidies from the government are recognised when there is reasonable assurance that the grant / subsidy will be received and all attaching conditions will be complied with.Where the government grant / subsidy relates to revenue, it is recognised as income on a systematic basis in the statement of profit and loss over the periods necessary to match them with the related costs, which they are intended to compensate. Government grant and subsidy receivable against an expense are deducted from such expense. Where the grant / subsidy relates to an asset, government grant and subsidy receivable against an asset are deducted from the carrying value of such asset or adjusted with depreciation charged on assets.

Grants in aid of the nature of promoter's contribution on the date of transition are treated under other equity. AEGCL has converted all the Govt. Grants as on 01.04.2021 into equity as per the order of GoA vide letter No. PEL.58/2021/Pt./105 dated 03.02.2022. Accounting for Govt. grants received during current year and previous year has been recognised under non current liability.The Government grants for specific fixed assets are treated as a deferred income in the financial statements and this income is recognized gradually in the Profit and Loss account over the useful life. Depreciation on such assets is reduced from non current liabiltiy and is also reduced from depreciation expense charged to Statement of Profit and Loss.

R.M. KOTHARI & CO. FRN 000143C Chartered Accountants

2.9 Segment Reporting

The company is governed by the Electricity Act, 2003.The Company's primary activities entail transmission of electricity to APDCL. This is the only activity performed and is thus also the main source of risks and returns. The Company's segments as reviewed by the Chief Operating Decision Maker (CODM) does not result into identification of different ways/ sources into which they see the performance of the Company.

Accordingly, the company has a single reportable and geographical segment i.e Transmission of electricity and operating in India respectively. Hence, the relevant disclosures as per Ind AS 108, Operating Segments are not applicable to the company.

2.10 Taxes on Income

Tax expense comprises current and deferred tax.

Current income tax

Current income tax is measured at the amount expected to be paid to the tax authorities in accordance with the Income Tax Act, 1961.

Current income tax assets and liabilities are measured at the amount expected to be recovered from or paid to the taxation authorities. The tax rates and tax laws used to compute the amount are those that are enacted or substantively enacted, at the reporting date.
Current income tax relating to items recognised outside profit or loss is recognised outside profit or loss (either in other comprehensive income or in equity).

Deferred tax

Deferred tax is provided using the liability method on temporary differences between the tax bases of assets and liabilities and their carrying amounts for financial reporting purposes at the reporting date. Deferred tax liabilities are recognised for all taxable temporary differences.

Deferred tax assets are recognised for all deductible temporary differences, the carry forward of unused tax credits and any unused tax losses. Deferred tax assets are recognised to the extent that it is probable that taxable profit will be available against which the deductible temporary differences, and the carry forward of unused tax credits and unused tax losses can be utilised.

The carrying amount of deferred tax assets is reviewed at each reporting date and reduced to the extent that it is no longer probable that sufficient taxable profit will be available to allow all or part of the deferred tax asset to be utilised. Unrecognised deferred tax assets are re-assessed at each reporting date and are recognised to the extent that it has become probable that future taxable profits will allow the deferred tax asset to be recovered.

Deferred tax assets and liabilities are measured at the tax rates that are expected to apply in the year when the asset is realised or the liability is settled, based on tax rates (and tax laws) that have been enacted or substantively enacted at the reporting date.

Deferred tax relating to items recognised outside profit or loss is recognised outside profit or loss (either in other comprehensive income or in equity. Deferred tax assets and deferred tax liabilities are offset if a legally enforceable right exists to set off current tax assets against current tax liabilities and the deferred taxes relate to the same taxable entity and the same taxation authority.

Tax credit is recognised in respect of Minimum Alternate Tax (MAT) paid in terms of section 115 JAA of the Income Tax Act, 1961 based on convincing evidence that the Company will pay normal income tax within statutory time frame and the same is reviewed at each reporting date.

R. M. KOTHARI & CO. FRN 000143C Chartered Accountants

2.11 Cash Flow Statement

Cash flows are reported using the indirect method prescribed in the Ind AS 7 'Statement of Cash Flows', whereby profit before tax is adjusted for the effect of transactions of a non cash nature, any deferral or accruals of past and future operating cash receipts or payments and items of income associated with investing or financing cash flows.

2.12 Cash and cash equivalents

Cash and cash equivalents include cash on hand and at bank, and fixed deposits with banks having a maturity of three months or less from the date of acquisition that are readily convertible to a known amount of cash and are subject to an insignificant risk of changes in value.

2.13 Earnings per share

Basic earnings per share are calculated by dividing the net profit or loss for the period attributable to equity shareholders by the weighted average number of equity shares outstanding during the period.

For the purpose of calculating diluted earnings per share, the net profit or loss for the period attributable to equity shareholders and the weighted average number of shares outstanding during the period are adjusted for the effects of all dilutive potential equity shares

2.14 Accounting for Expenses.

All the expenses are accounted for on accrual basis as and when it gets accrued.

2.15 Borrowing Costs

Borrowing cost includes interest and ancillary costs incurred in connection with the arrangement of borrowings and charged to statement of profit and loss on the basis of effective interest rate (EIR).

Borrowing cost includes exchange differences arising from foreign currency borrowings to the extent they are regarded as an adjustment to the interest cost.

Borrowing cost that are attributable to the acquisition or construction of a qualifying asset are capitalised as part of the cost of such asset till such time the asset is ready for its intended use. A qualifying asset is an asset that necessarily takes a substantial period of time to get ready for its intended use.

All other borrowing costs are expensed in the period in which they occur.

2.16 Provisions, contingent liabilities and contingent assets

Provisions are recognised when the Company has a present obligation (legal or constructive) as a result of a past event, it is probable that an outflow of resources embodying economic benefits will be required to settle the obligation and a reliable estimate can be made of the amount of the obligation. The expense relating to a provision is charged/provided in the statement of profit and loss.

The Company does not recognize a contingent liability but discloses its existence in the financial statements Contingent liability is disclosed in the case of:

- A present obligation arising from past events, when it is not probable that an outflow of resources will not be required to settle the obligation
- A present obligation arising from past events, when no reliable estimate is possible
- A possible obligation arising from past events, unless the probability of outflow of resources is remote.

Contingent liabilities are reviewed at each reporting date.

Contingent assets usually arise from unplanned or other unexpected events that give rise to the possibility of an inflow of economic benefits to the entity. Contingent assets are recognized when the realization of income is virtually certain, then the related asset is not a contingent asset and its recognition is appropriate. Contingent assets are reviewed at each reporting date. A contingent asset is disclosed where an inflow of economic benefits is probable.

R. M. KOTHARI & CO. FRN 000143C Chartered Accountants

0015

2.17 Impairment of Non-Financial Assets

The carrying amount of assets are reviewed at each reporting date if there is any indication of impairment based on internal and external factors.

An impairment loss is recognised wherever the carrying amount of an asset exceeds its recoverable amount. An asset's recoverable amount is the higher of fair value less costs of disposal and value in use. In assessing value in use, the estimated future cash flows are discounted to their present value using a pre-tax discount rate that reflects current market assessments of the time value of money and the risks specific to the asset. In determining fair value less cost of disposal, recent market transactions are taken into account. If no such transaction can be identified, an appropriate valuation model is used.

A previously recognised impairment loss is further provided or reversed depending on changes in circumstances.

Where an impairment loss subsequently reverses, the carrying amount of the asset is increased to the revised estimate of its recoverable amount, but so that the increased carrying amount does not exceed the carrying amount that would have been determined had no impairment loss been recognised for the asset in prior periods. A reversal of an impairment loss is recognised as income immediately.

2.18 General Provident Fund:

GPF liability is payable to an employee only after completion of 25 years of qualifying services. Accumulation of GPF is utilized as internal resources by the Corporation. As such GPF has been shown as unsecured loan.

2.19 BST Charge

BST charge payable to Pension Trust has been calculated @20 paisa per unit on the actual energy injected to APDCL.

2.20 Leases

a) The Company recognizes a right-of- use asset and a lease liability at the transition date.i.e April 01, 2021. The right of- use asset is initially measured at cost, which comprises the initial amount of lease liability adjusted for any lease payments made at or before the commencement date , plus any initial direct cost incurred and an estimate of costs to dismantle and remove the underlying asset or to restore the underlying asset or the site on which it is located, less any lease incentives received.

b) The right-of-use asset is subsequently depreciated using the straight-line method from the commencement date to the earlier of the end of the useful life of the right-of-use-asset or the end of the lease term. The estimated useful life of the right-of-use asset is determined on the same basis as those of property, plant and equipment. In addition, the right-of-use asset is periodically reduced by impairment losses, if any, and adjusted for certain remeasurements of the lease liability. However the company is applying depreciation method as per AERC regulations.

c) The lease liability is initially measured at the present value of the lease payments that are not paid at the commencement date, discounted using the interest rate implicit in the lease or, if that rate cannot be readily determined, the Company's incremental borrowing rate.

d) The lease liability is measured at amortized cost using the effective interest method, it is remeasured when there is a change in future lease payments from a change in an index or rate. When the lease liability is remeasured in this way, a corresponding adjustment is made to the carrying amount of the right -of-use asset, or is recorded in the profit and loss if the carrying amount of the right-of-use asset has been reduced to zero.
The company has made one time payment for right of use assets and no lease payments are due in future. Therefore no lease liability has been recognized in company financial statements.

e) The Company presents right-of-use asset that do not meet the definition of Investment property in the "Right of use Assets" separately on the face of the Balance sheet.

R. M. KOTHARI & CO. FRN 000143C Chartered Accountants

f) Short term Lease and Leases of low value assets:-The Company has elected not to recognize right-of-use asset and lease liabilities for short term leases that have lease term of 12 months or less and leases of low value assets. The Company recognizes the lease payments associated with these leases as an expense on a straight-line basis over the lease term.

Pronouncements regarding changes in Indian Accounting Standards but not yet effective at the Balance Sheet Date

Ministry of Corporate Affairs ("MCA") notifies new standards or amendments to the existing standards under Companies (Indian Accounting Standards) Rules as issued from time to time. On March 31, 2023, MCA amended the Companies (Indian Accounting Standards) Amendment Rules, 2015, by issuing the Companies (Indian Accounting Standards) Amendment Rules, 2023, which are applicable for annual reporting periods beginning from April 01, 2023, as below:

Ind AS 1 - Presentation of Financial Statements

This amendment requires the entities to disclose their material accounting policies rather than their significant accounting policies. Accounting policy information, together with other information, is material when it can reasonably be expected to influence decisions of primary users of general purpose financial statements. The Company has evaluated the amendment and the impact of the amendment is insignificant in the Company's financial statements.

Ind AS 8 - Accounting Policies, Changes in Accounting Estimates and Errors

This amendment will help entities to distinguish between accounting policies and accounting estimates. The definition of change in accounting estimates has been replaced with a definition of accounting estimates. Under the new definition, accounting estimates are 'monetary amounts in financial statements that are subject to measurement uncertainty.' The Company has evaluated the amendment and there is no significant impact on its financial statements.

Ind AS 12 - Income Taxes

This amendment has narrowed the scope of recognition exemption so that it no longer applies to transactions that, on initial recognition, give rise to equal taxable and deductible temporary differences. The Company does not expect to have any significant impact on its financial statement.

Other amendments

Other amendments include amendments in Ind AS 102, Share- based Payments, Ind AS 103, Business Combination, Ind AS 109, Financial Instruments, Ind AS 115, Revenue from contract with customers are mainly editorial in nature in order to provide better clarification of respective Ind AS. The Company does not expect to have any significant impact on its financials statements.

R. M. KOTHARI & CO. FRN 000143C Chartered Accountants

Notes to the financial statements

3a Property, plant & equipment

(Rs. In Lakh)

Particulars	Land & Rights	Buildings	Hydraulic	Plant & machinery	Office Equipment	Furniture & Fixture	Other Civil Works	Vehicles	Lines & Cable Network	Total
Gross Block										
Deemed Cost										
Balance as at April 1, 2021 (refer note 3a.1)	3,837.15	5,598.49	264.34	1,24,668.48	424.49	716.88	12,789.05	495.68	1,07,490.19	2,56,284.76
Changes due to prior period error	(45.43)	553.66	-	10,400.18	31.34	23.99	2,834.06		8,586.42	22,384.21
										-
Restated Balance as at April 1, 2021	3,791.73	6,152.15	264.34	1,35,068.66	455.83	740.87	15,623.11	495.68	1,16,076.60	2,78,668.97
Additions/deletion during the year	944.40	240.38		2,412.40	95.75	67.36	125.31	-	8,409.03	12,294.64
Balance as at March 31, 2022	4,736.13	6,392.53	264.34	1,37,481.07	551.58	808.22	15,748.42	495.68	1,24,485.64	2,90,963.61
Balance as at April 1, 2022	4,736.13	6,392.53	264.34	1,37,481.07	551.58	808.22	15,748.42	495.68	1,24,485.64	2,90,963.61
Additions/deletion during the year	-	130.28	-	5,669.15	105.47	51.87	253.64	-	5,568.39	11,778.79
Balance as at March 31, 2023	4,736.13	6,522.81	264.34	1,43,150.21	657.05	860.09	16,002.06	495.68	1,30,054.02	3,02,742.40
Accumulated Depreciation										
Balance as at April 1, 2021 (refer note 3a.1)	-	2,356.58	251.13	55,467.61	322.79	400.32	1,884.14	446.11	76,513.36	1,37,642.04
Changes due to prior period	-	60.97	-	2,115.65	4.43	2.29	421.35		852.91	3,457.60
Restated Balance as at April 1, 2021	-	2,417.55	251.13	57,583.26	327.22	402.60	2,305.49	446.11	77,366.27	1,41,099.64
Depreciation during the year	-	193.71		6,507.91	56.89	44.07	470.62		5,689.03	12,962.24
Accumulated Depreciation on deletions	-	-	-	-	-	-	-	-	-	-
Balance as at March 31, 2022	-	2,611.26	251.13	64,091.18	384.11	446.68	2,776.12	446.11	83,055.30	1,54,061.87
Depreciation during the year		198.24		6,777.46	68.97	47.14	477.09		6,141.36	13,710.26
Accumulated Depreciation on deletions										-
Balance as at March 31, 2023	-	2,809.50	251.13	70,868.63	453.08	493.82	3,253.20	446.11	89,196.66	1,67,772.13
Net Carrying value as at March 31, 2023	4,736.13	3,713.31	13.22	72,281.58	203.97	366.27	12,748.86	49.57	40,857.36	1,34,970.27
Net Carrying value as at March 31, 2022	4,736.13	3,781.27	13.22	73,389.89	167.47	361.55	12,972.30	49.57	41,430.34	1,36,901.74
Net Carrying value as at April 1, 2021	3,791.73	3,734.59	13.22	77,485.40	128.61	338.26	13,317.62	49.57	38,710.34	1,37,569.34

3a.1 The Company has elected to continue with the carrying value of all of its property, plant and equipment, measured as per the Previous GAAP and use that carrying value as its deemed cost as of the transition date under Ind AS, accordingly gross block and accumulated depreciation as per the previous GAAP as on April 1, 2021, are carried forward for Ind AS financial statements.

R. M. KOTHARI & CO. FRN 000143C Chartered Accountants

Notes to the financial statements

(Rs. In Lakh)

3b	Right of use assets	As at March 31, 2023	As at March 31, 2022	As at April 1, 2021
	Land			
	Cost			
	Opening balance at the beginning of the year	30.00	30.00	30.00
	Additions/disposals during the year	-	-	-
	Closing Balance at the end of the year	**30.00**	**30.00**	**30.00**
	Accumulated depreciation and amortisation			
	Opening balance at the beginning of the year	5.61	4.71	3.81
	Depreciation/amortization during the year	0.90	0.90	0.90
	Closing Balance at the end of the year	**6.51**	**5.61**	**4.71**
	Net Carrying amount	**23.49**	**24.39**	**25.29**

3b.1 Although right of use assets should be depreciated over lease term period as per the accounting standard.The company has computed depreciation on Right of use assets (i.e. leasehold land) as per the rates approved by the Hon'ble AERC, as the operations of the corporation are governed by the provisions of the Electricity Act,2003. As per Regulation 33.4 of AERC Terms and condition for MYT Regulations, 2021, depreciation shall be calculated annually based on SLM and at the specified rates for a period of 12 years from the date of commercial operation and the remaining depreciable value shall be spread over the balance useful life of the assets.

(Rs. In Lakh)

4	Capital work in progress	As at March 31, 2023	As at March 31, 2022 Restated	As at April 1, 2021 Restated
	Opening balance at the beginning of the year	62,864.56	57,104.14	85,977.42
	Additions/disposals during the year	(7,225.94)	3,774.26	(6,576.43)
	Changes due to prior period error	20,310.69	1,986.16	(22,296.85)
	Total	**75,949.31**	**62,864.56**	**57,104.14**

CWIP ageing schedule as at March 31,2023	Amount in CWIP for a period of				
Particulars	**Less than 1 year**	**1-2 years**	**2-3 years**	**More than 3 years**	**As at March 31, 2023**
Project in progress	26,052.80	29,573.09	8,907.12	11,416.31	75,949.31
Project Temporarily Suspended	-	-	-	-	-
Total	**26,052.80**	**29,573.09**	**8,907.12**	**11,416.31**	**75,949.31**

CWIP ageing schedule as at March 31,2022	Amount in CWIP for a period of				
Particulars	**Less than 1 year**	**1-2 years**	**2-3 years**	**More than 3 years**	**As at March 31, 2022 Restated**
Project in progress	29,573.09	8,907.12	16,683.96	7,700.40	62,864.56
Project Temporarily Suspended	-	-	-	-	-
Total	**29,573.09**	**8,907.12**	**16,683.96**	**7,700.40**	**62,864.56**

CWIP ageing schedule as at March 31,2021	Amount in CWIP for a period of				
Particulars	**Less than 1 year**	**1-2 years**	**2-3 years**	**More than 3 years**	**As at April 1, 2021 Restated**
Project in progress	8,907.12	16,683.96	17,580.87	13,932.19	57,104.14
Project Temporarily Suspended	-	-	-	-	-
Total	**8,907.12**	**16,683.96**	**17,580.87**	**13,932.19**	**57,104.14**

(Rs. In Lakh)

5	Investments (Non current)	Quantity	Face Value (₹)	As at March 31, 2023	As at March 31, 2022	As at April 1, 2021
	Investment carried at cost less accumulated impairment, if any					
	Investment in Equity shares fully paid up (Unquoted)					
	North East Transmission Company Ltd	5,34,82,000	10	5,348.20	5,348.20	5,348.20
	Total			**5,348.20**	**5,348.20**	**5,348.20**

R.M. KOTHARI & CO. FRN 000143C Chartered Accountants

Notes to the financial statements

(Rs. In Lakh)

6	Other financial assets (Non current)	As at March 31, 2023	As at March 31, 2022	As at April 1, 2021
	-In deposit accounts (with original maturity more than twelve months)	48,083.88	8,875.33	2,548.40
	Total	48,083.88	8,875.33	2,548.40

(Rs. In Lakh)

7	Other non current assets	As at March 31, 2023	As at March 31, 2022	As at April 1, 2021
	(Unsecured, considered good unless otherwise stated)			
	Expenses on Surveys or feasibility Studies	96.48	35.81	26.56
	Advance to suppliers/contractors (Capital)	7,410.67	7,237.13	930.54
	Total	7,507.15	7,272.94	957.10

(Rs. In Lakh)

8	Inventories	As at March 31, 2023	As at March 31, 2022 Restated	As at April 1, 2021 Restated
	Capital Materials Stock account	3,478.42	2,496.51	2,494.11
	O&M Materials Stock account	847.10	750.53	804.21
	Other Material account	331.97	327.99	323.46
	Material stock-Excess/Shortage pending investigation - Capital	25.09	25.09	25.09
	Total (a)	4,682.58	3,600.12	3,646.87
	Less: Provision against Stock (b)	1,392.90	1,262.48	1,262.48
	Total (a)-(b)	3,289.68	2,337.64	2,384.39

8.1 After conducting a reconciliation of the difference between book figure of stocks and physical verification report of stocks during FY 2022-23, AEGCL has arrived at a difference amount of ₹ 8.54 crore as on 31.03.2023 , which is in the process of reconciliation.

8.2 Inventories are stated at the lower of cost of net realisable value. Net realisable value represents the estimated selling price for inventories less all estimated costs of completion and costs necessary to make the sale.

R. M. KOTHARI & CO. FRN 000143C Chartered Accountants

Notes to the financial statements

(Rs. In Lakh)

9	Trade receivables	As at March 31, 2023	As at March 31, 2022 Restated	As at April 1, 2021
	Current			
	Unsecured, Considered good			
	-Receivable from APDCL	14,523.55	14,698.18	14,761.45
	Total	**14,523.55**	**14,698.18**	**14,761.45**

9.1 **Trade receivables ageing schedule as at March 31, 2023**

(Rs. In Lakh)

Particulars	Outstanding for following periods from due date of payment						
	Not due	Less than 6 months	6 months - 1 year	1-2 years	2-3 years	More than 3 years	Total
(i) Undisputed Trade Receivables							
- Considered good	-	14,523.55	-				**14,523.55**
- Significant increase in credit risk	-	-	-	-	-	-	-
- Credit impaired	-	-	-	-	-	-	-
(ii) Disputed Trade Receivables							
- Considered good	-	-	-	-	-	-	-
- Significant increase in credit risk	-	-	-	-	-	-	-
- Credit impaired	-	-	-	-	-	-	-

Trade receivables ageing schedule as at March 31, 2022

Particulars	Outstanding for following periods from due date of payment						
	Not due	Less than 6 months	6 months - 1 year	1-2 years	2-3 years	More than 3 years	Total
(i) Undisputed Trade Receivables							
- Considered good	-	14,698.18		-	-	-	**14,698.18**
- Significant increase in credit risk	-	-	-	-	-	-	-
- Credit impaired	-	-	-	-	-	-	-
(ii) Disputed Trade Receivables							
- Considered good	-	-	-	-	-	-	-
- Significant increase in credit risk	-	-	-	-	-	-	-
- Credit impaired	-	-	-	-	-	-	-

Trade receivables ageing schedule as at April 1, 2021

Particulars	Outstanding for following periods from due date of payment						
	Not due	Less than 6 months	6 months - 1 year	1-2 years	2-3 years	More than 3 years	Total
(i) Undisputed Trade Receivables							
- Considered good	-	14,761.45		-	-	-	**14,761.45**
- Significant increase in credit risk	-	-	-	-	-	-	-
- Credit impaired	-	-	-	-	-	-	-
(ii) Disputed Trade Receivables			-				
- Considered good	-	-	-	-	-	-	-
- Significant increase in credit risk	-	-	-	-	-	-	-
- Credit impaired	-	-	-	-	-	-	-

R. M. KOTHARI & CO. FRN 000143C Chartered Accountants

Notes to the financial statements

(Rs. In Lakh)

10	Cash and cash equivalents	As at March 31, 2023	As at March 31, 2022 Restated	As at April 1, 2021 Restated
	Cash on hand	136.26	135.32	125.29
	Balance with bank			
	-In current accounts	15,095.33	13,005.52	10,543.74
	-In deposit accounts (with original maturity less than three months)	-	-	-
	Total	15,231.59	13,140.84	10,669.03

(Rs. In Lakh)

11	Bank balances other than cash and cash equivalents	As at March 31, 2023	As at March 31, 2022	As at April 1, 2021
	Other bank balances			
	-In deposit accounts (with original maturity more than three months but upto twelve months)	60,244.34	89,418.55	87,274.89
	Total	60,244.34	89,418.55	87,274.89
11.1	Details of fixed deposits			
	STDRs managed by AEGCL(Principal accounts)	50,881.00	81,196.53	79,058.25
	STDRs managed by AEGCL-NERPSIP	315.45	258.91	529.03
	STDRs managed by NPS cell, AEGCL	-	1,600.00	1,600.00
	STDRs managed by CPF-I, AEGCL	6,327.70	6,363.11	6,087.61
	AEGCL-SIR	1,000.00	-	-
	NPS Gratuity	1,720.19	-	-
	Total	60,244.34	89,418.55	87,274.89

(Rs. In Lakh)

12	Loans	As at March 31, 2023	As at March 31, 2022	As at April 1, 2021
	(Unsecured, considered good unless otherwise stated)			
	Loans and advances to staff	108.37	90.25	87.70
	Amount Receivable from employees	4.22	4.22	4.22
	Advances To APDCL	0.97	0.97	0.97
	Others	4.25	4.25	4.25
	Total	117.81	99.69	97.14

(Rs. In Lakh)

13	Other Financial Assets	As at March 31, 2023	As at March 31, 2022	As at April 1, 2021
	Receivable From APDCL	10,525.01	10,525.01	10,525.01
	Receivable from APGCL	2.36	3.16	1.94
	Total	10,527.37	10,528.17	10,526.95

(Rs. In Lakh)

14	Current tax assets (net)	As at March 31, 2023	As at March 31, 2022 Restated	As at April 1, 2021 Restated
	Tax deducted at source	1,579.18	1,644.20	1,671.70
	Advance Income Tax	1,004.54	1,004.54	1,004.54
	Total	2,583.72	2,648.74	2,676.24

(Rs. In Lakh)

15	Other current assets	As at March 31, 2023	As at March 31, 2022 Restated	As at April 1, 2021 Restated
	(Unsecured, considered good unless otherwise stated)			
	Income Accrued but not Due	2,786.50	2,288.97	1,538.63
	Advances for O&M supplies/works	1,707.72	1,707.23	1,707.77
	Inter Unit A/c – Materials	770.57	770.66	788.93
	Inter Unit A/c - Capital Expenditure & PPE	2.00	2.00	31.14
	Inter Unit A/c - Other Transaction / Adjustments	113.83	113.83	113.93
	Receivable From Pension Trust	24,671.59	23,694.96	22,659.88
	Misc Receivables	1,421.04	1,404.14	1,390.09
	Other deposits	1.49	1.49	1.49
	Total	31,474.74	29,983.28	28,231.86

15.1 As per GoA's notification No. PEL. 190/2004/69 dated 4th February, 2005, the unfunded past liability on account of GPF and LEB will be funded through the cash streams as mentioned therein and the existing Pension Trust of ASEB will be the common trust for all the new companies. In terms of the said notification and Board's approval of Item No. 8 dated 22.01.2021,the unfunded past liability towards GPF and LEB paid during the year has been claimed from Pension Trust out of which the amount relating to GPF has been transferred to Other Reserve.

R.M. KOTHARI & CO. FRN 000143C Chartered Accountants

Notes to the financial statements

(Rs. In Lakh)

16	Share capital	As at March 31, 2023	As at March 31, 2022	As at April 1, 2021
	Authorised share capital			
	30,00,00,000 (previous year - 1,00,00,000) Equity Shares of face value of Rs. 100/- each	3,00,000.00	10,000.00	10,000.00
	Total	**3,00,000.00**	**10,000.00**	**10,000.00**
	Issued, Subscribed and Fully Paid up			
	269,338,558 (March 2022: 99,93,194) Equity Shares of face value of Rs. 100/- each	2,69,338.56	9,993.19	9,993.19
	Total	**2,69,338.56**	**9,993.19**	**9,993.19**

16.1 Reconciliation of Share Capital

	Number of shares	Amount
Equity shares of INR 100 each		
As at April 1, 2021	99,93,194	9,993.19
Issued during the year	-	-
As at 31 March 2022	**99,93,194**	**9,993.19**
Issued during the year	25,93,45,364	2,59,345.37
As at 31 March 2023	**26,93,38,558**	**2,69,338.56**

16.2 Terms/rights attached to equity shares

a) Issued , subscribed and paid up no of shares i.e 99,93,194 were allotted as fully paid up pursuant to transfer scheme without payment being received in cash. Further no shares have been issued by the Company for consideration other than cash, during the period of five years immediately preceding the reporting date.

b) The Company has only one class of equity shares having par value of INR 100 per share. Each holder of equity shares is entitled to one vote per share . The Company will declare and pay dividends in Indian rupees

In the event of liquidation of the Company, the holders of equity shares will be entitled to receive remaining assets of the Company , after distribution of all preferential amounts. The distribution will be in proportion to the number of equity shares held by the shareholders.

16.3 Details of shareholders holding more than 5% shares in the Company

Name of the shareholder	As at March 31, 2023	
Equity shares of INR 100 each	**Number**	**% Holding**
Government of Assam (GOA)	26,93,38,558	100%

Name of the shareholder	As at March 31, 2022	
Equity shares of INR 100 each	**Number**	**% Holding**
Government of Assam (GOA)	99,93,194	100%

Name of the shareholder	As at April 1, 2021	
Equity shares of INR 100 each	**Number**	**% Holding**
Government of Assam (GOA)	99,93,194	100%

R. M. KOTHARI & CO. FRN 000143C Chartered Accountants

Notes to the financial statements

(Rs. In Lakh)

16.4 Details of shareholding of Promoters

Name of the shareholder	As at March 31, 2023		As at March 31, 2022		% Change during the year
	Number	% Holding	Number	% Holding	
Equity shares of INR 100 each					
Government of Assam (GOA)	26,93,38,558	100%	99,93,194	100%	Nil

Name of the shareholder	As at March 31, 2022		As at April 1, 2021		% Change during the year
	Number	% Holding	Number	% Holding	
Equity shares of INR 100 each					
Government of Assam (GOA)	99,93,194	100%	99,93,194	100%	Nil

16.5 The company has converted Loan from Government of Rs. 638.41 crore and Grant of AEGCL of Rs. 1955.05 crore as on 31.03.2021 into equity of Rs. 2593.46 crore in financial year 2022-2023 as approved by Hon'ble cabinet, GOA.

(Rs. In Lakh)

17 Other equity	As at March 31, 2023	As at March 31, 2022 Restated	As at April 1, 2021 Restated
Other equity			
Opening balance at the beginning of the year (refer note 42)	1,95,504.60	1,95,504.60	1,95,504.60
Addition/Reduction during the year	(1,95,504.60)	-	-
Closing balance at the end of the year (a)	-	**1,95,504.60**	**1,95,504.60**
Other Reserve			
Opening balance at the beginning of the year (refer note 17.1)	15,425.64	14,410.54	14,410.54
Addition/Reduction during the year	663.25	1,015.10	-
Closing balance at the end of the year (b)	**16,088.89**	**15,425.64**	**14,410.54**
Retained earnings			
Statement of profit & loss			
Opening balance at the beginning of the year	(36,473.01)	(41,744.25)	(41,859.40)
Changes due to prior period error	-	-	115.15
Add: Profit (loss) for the year	4,113.38	5,271.24	-
Closing balance at the end of the year (c)	**(32,359.63)**	**(36,473.01)**	**(41,744.25)**
Contingency Reserve			
Opening balance at the beginning of the year (refer note 17.1)	-	-	-
Addition/Reduction during the year	218.30	-	-
Closing balance at the end of the year (d)	**218.30**	-	-
Self Insurance Reserve			
Opening balance at the beginning of the year (refer note 17.1)	769.44	495.67	-
Changes due to prior period error			495.67
Addition/Reduction during the year	246.52	273.77	-
Closing balance at the end of the year (e)	**1,015.96**	**769.44**	**495.67**
Total (a+b+c+d+e)	**(15,036.48)**	**1,75,226.67**	**1,68,666.56**

Nature and purpose of reserves:

17.1 a) Other reserves includes claim for recovery of appropriate share (72.04)% of GPF as past unfunded liabilities receivables from Pension Trust as per GOA notification No. PEL 190/2004/69 dated 04-02-2005

b) Contingency Reserve Includes 0.1 per cent of the gross fixed assets (GFA) approved by the AERC at the beginning of the year i.e., as on 01.04.2022 subject to the limit of 1% of GFA. This has been done as per Regulation No. 67.9 of AERC MYT Regulations, 2021 to meet expenses arising out of accidents, natural calamities or circumstances beyond the control of the Licensee.

c) Self-Insurance Reserve Includes 0.1% per annum of gross value of fixed assets (GFA) at the close of the year subject to the limit of 10% of GFA from FY 2019-20 onwards to meet the future losses arising from the uninsured risks for replacement/repair of the damaged assets. This has been done as per approval of the AERC vide order dated 24.05.2022 with prior approval of the Board of Directors of AEGCL.

R. M. KOTHARI & CO. FRN 000143C Chartered Accountants

Notes to the financial statements

(Rs. In Lakh)

18 Grants (Non current)	As at 31 March 2023	As at 31 March 2022 Restated	As at April 1, 2021 Restated
Unspent capital grant			
Balance as at beginning of the year	22,648.62	221.00	-
Add: Addition during the year	28,557.72	22,646.66	330.08
Less: Utilisation during the year	617.91	219.04	109.08
Balance as at closing of the year	**50,588.43**	**22,648.62**	**221.00**

18.1 Grant includes :-

(a) Grant From GOA	13,384.95	5,446.83	-
(b) Grant From ADB	-	-	-
(c) Grant From Central Government	28,871.54	15,411.39	-
(d) Customer's Contribution towards cost of capital assets	8,331.94	1,790.40	221.00

18.2 Utilisation during the year includes depreciation on assets created out of grants and consumer contributions.

(Rs. In Lakh)

19 Borrowings (Non current)	As at 31 March 2023	As at 31 March 2022 Restated	As at April 1, 2021
Unsecured, at amortised cost			
Loans from ADB	-	9,567.57	6,048.92
State Govt. Loan	1,151.70	55,152.19	18,926.12
General Provident Fund	2,081.16	2,660.28	3,517.37
Total	**3,232.86**	**67,380.04**	**28,492.41**

19.1 The company has converted Loans from Government of Rs. 638.41crore as on 31.03.2021 into equity in financial year 2022-2023 as approved by Hon'ble cabinet, GOA.

19.2 Details of terms of repayment and interest in respect of the unsecured long-term borrowings to be given here:

a) State Govt. Loan :

Term loan of Rs. 8.79 crore at the rate of 10% p.a., repayable in 10 yearly installments of INR 87.90 lakh.

Term loan of Rs. 3.606 crore at the rate of 10% p.a., repayable in 10 yearly installments of INR 36.06 lakh.

b) General Provident Fund :

At the rate of 7.10% p.a. (Previous year 7.10% p.a.), repayable after completion of 25 years of qualifying services of the employee..

(Rs. In Lakh)

20 Provisions (Non current)	As at 31 March 2023	As at 31 March 2022 Restated	As at April 1, 2021
Provision For Employee Benefits:			-
Liability towards pension trust	1,803.05	678.86	303.45
Total	**1,803.05**	**678.86**	**303.45**

20.1 Liability towards Pension Trust includes 33.50% of Pay plus DA of the permanent employees of AEGCL (excluding those who joined services on or after 01.01.04) for the FY 2022-23 for terminal benefits liability for future service as per AERC and GoA's notification No.PEL.190/2004/69 dated 04.02.2005 and Board's approval of Item No. 9 dated 22.01.2021.

20.2 Liability towards Pension Trust includes BST charge payable to Pension Trust computed @ Rs. 0.20 per unit as approved by the AERC vide Tariff Order dated 21.03.2022 on the actual energy injected to APDCL during FY 2022-23.

R. M. KOTHARI & CO. FRN 000143C Chartered Accountants

Notes to the financial statements

(Rs. In Lakh)

21 Borrowings (Current)	As at 31 March 2023	As at 31 March 2022	As at April 1, 2021
Repayment due on ADB loan	-	-	3,518.65
Repayment due on State govt loan	87.90	-	35,347.07
Bank Overdraft Account	0.00	-	-
Total	**87.90**	**-**	**38,865.72**

(Rs. In Lakh)

22 Trade payables	As at 31 March 2023	As at 31 March 2022	As at April 1, 2021 Restated
Trade payable			
(a) Total outstanding dues of micro enterprises and small enterprises	-	-	-
(b) Total outstanding dues of creditors other than micro enterprises and small enterprises	16,896.60	16,896.60	16,896.92
Total	**16,896.60**	**16,896.60**	**16,896.92**

22.1 Trade Payables ageing schedule as at March 31, 2023

(Rs. In Lakh)

Particulars	Outstanding for following periods from due date of the payment					Total
	Not due	Less than 1 year	1-2 years	2-3 years	More than 3 years	
(i) Undisputed Trade Payables						
- MSME	-	-	-	-	-	-
-Others	-	16,896.60				16,896.60
(ii) Disputed Trade Payables						
-MSME	-	-	-	-	-	-
-Others	-	-	-	-	-	-
Trade Payables ageing schedule as at March 31, 2023	**-**	**16,896.60**	**-**	**-**	**-**	**16,896.60**

Trade Payables ageing schedule as at March 31, 2022

Particulars	Outstanding for following periods from due date of the payment					Total
	Not due	Less than 1 year	1-2 years	2-3 years	More than 3 years	
(i) Undisputed Trade Payables						
- MSME	-	-	-	-	-	-
-Others	-	16,896.60		-		16,896.60
(ii) Disputed Trade Payables						
-MSME	-	-	-	-	-	-
-Others	-	-	-	-	-	-
Trade Payables ageing schedule as at March 31, 2022	**-**	**16,896.60**	**-**	**-**	**-**	**16,896.60**

Trade Payables ageing schedule as at April 1, 2021

Particulars	Outstanding for following periods from due date of the payment					Total
	Not due	Less than 1 year	1-2 years	2-3 years	More than 3 years	
(i) Undisputed Trade Payables						
- MSME	-	-	-	-	-	-
-Others	-	16,896.92	-	-		16,896.92
(ii) Disputed Trade Payables						
-MSME	-	-	-	-	-	-
-Others	-	-	-	-	-	-
Trade Payables ageing schedule as at April 1, 2021	**-**	**16,896.92**	**-**	**-**	**-**	**16,896.92**

(Rs. In Lakh)

23 Other financial liabilities (current)	As at 31 March 2023	As at 31 March 2022	As at April 1, 2021
Interest accrued and due on borrowings	38,614.39	51,368.10	64,210.02
Deposits and retention from suppliers and contractors	11,339.70	9,822.05	7,222.49
Total	**49,954.09**	**61,190.15**	**71,432.51**

23.1 Interest accrued and due on borrowings

(a) Interest accrued & due on SG Loan (ADB)	5,466.45	7,288.59	9,110.74
(b) Interest accrued & due on State Govt Loan	33,147.95	44,079.51	55,099.28

R. M. KOTHARI & CO. FRN 000143C Chartered Accountants

Notes to the financial statements

(Rs. In Lakh)

24 Other current liabilities	As at 31 March 2023	As at 31 March 2022 Restated	As at April 1, 2021 Restated
Liabilities for capital supplies /works	4,937.27	4,210.01	2,586.33
Liabilities for O&M supplies/works	2,945.85	2,742.72	2,617.99
Unpaid salaries, wages, bonus, etc.	2.40	5.86	5.86
Salaries, wages, bonus etc., Payable	2,773.47	2,366.81	2,327.19
Staff deduction and recovery payable	552.00	534.62	483.71
Other Liabilities	17,801.47	17,460.50	14,755.73
Advance from APGCL	38.99	32.65	32.65
Total	**29,051.45**	**27,353.17**	**22,809.46**

(Rs. In Lakh)

25 Provisions (current)	As at 31 March 2023	As at 31 March 2022 Restated	As at April 1, 2021 Restated
Provision for employee benefits	3,382.44	2,606.68	2,017.16
Provision for expenses	576.20	168.27	476.03
Total	**3,958.64**	**2,774.95**	**2,493.19**

25.1 Staff related provision includes provision for bonus of Rs. 35, 00,000 /- and provision for gratuity of employees who are covered under New Pension Scheme. Provision for bonus has been made on the basis of expenditure of the previous year.

(Rs. In Lakh)

26 Current tax liability (net)	As at 31 March 2023	As at 31 March 2022	As at April 1, 2021
Income tax	-	-	-
Total	-	-	-

26.1 **Calculation for MAT:**

Particulars	Amount in Rs.
Profit as per part II and III of Schedule VI	41,13,37,730
Less:	
BROUGHT FORWARD LOSS OR UNABSORBED DEPRECIATION WHICHEVER IS LESS	2,15,74,55,445
Tax calculated @ 15.0% on Book Profit is Rs. 0	-
Tax Due @ 25% (Turnover for Fin. Year 2020-21 is less than 400 Crore)	-

R.M. KOTHARI & CO. FRN 000143C Chartered Accountants

Notes to the financial statements

27 Revenue from operations

(Rs. In Lakh)

Particulars	For the year ended 31 March 2023	For the year ended 31 March 2022 Restated
Revenue from services		
Wheeling charges (Transmission charges) from APDCL	43,467.37	36,372.38
Wheeling charges (Transmission charges) from open access consumers	420.23	1,191.15
Income from Transmission Incentive bill	338.37	264.36
Total	**44,225.97**	**37,827.89**

27.1 **A.** Wheeling Charges of electric energy is accounted on the basis of rates approved by the Hon'ble AERC i.e., Annual Fixed Charge of Rs. 466.96 Crore including SLDC Charge of Rs. 6.50 Crore for FY 2022-23 vide Tariff Order dated 21.03.2022. As per the said Tariff Order, the above Wheeling Charge includes the following.

a) Net ARR for Transmission for FY 2022-23 vide Tariff Order dated 21.03.2022 - Rs. 460.46 Crore.

b) SLDC Charges for FY 2022-23 vide Tariff Order dated 21.03.2022- Rs. 6.50 Crore.

c) AEGCL had made adjustment of cumulative Revenue Surplus along with the holding cost amounting to Rs. 31.54 Crore approved by the Hon'ble AERC after Truing up of AEGCL for FY 2020-21, vide Tariff Order dated 21.03.2022, to the monthly bills raised to APDCL during the FY 2022-23.

d) AEGCL had also made adjustment of cumulative Revenue Gap including carrying cost amounting to Rs. 0.45 Crore approved by the Hon'ble AERC after Truing up of SLDC for FY 2020-21, vide Tariff Order dated 21.03.2022, to the monthly bills raised to APDCL during the FY 2022-23.

B. AEGCL had made a provision of Rs. 1.20 crore for non realisation of revenue billed to APDCL during FY 2022-23 as per the agreement for construction of "LILO of 1 ckt. of 132 kV Biswanath Chariali (PG) to Itanagar at Gohpur SS, AEGCL" between AEGCL and NERII Transmission Ltd.

After considering the above adjustments Revenue from Wheeling charges to APDCL stood at Rs. 434.67 Crore for the FY 2022-23

27.2 The quantitative details of electrical energy transacted by the Corporation during the FY 2022-23 along with previous year were as follows:

Particulars	Unit	For the year ended 31 March 2023	For the year ended 31 March 2022
Energy Injected			
Total Energy Sent Out	MU	**11452.47**	**10889.43**
Energy Sent Out to APDCL	MU	**11073.63**	**10524.64**
Energy Sent Out to OA Consumers	MU	10985.26	10258.68
Transmission Loss	MU	88.37	265.96
Transmission Loss	MU	**378.84**	**364.79**
	%	**3.31**	**3.35**

(Rs. In Lakh)

28 Other income	For the year ended 31 March 2023	For the year ended 31 March 2022 Restated
Interest		
Interest on Fixed Deposits with Banks	5,083.69	4,664.68
Interest from Banks	226.36	121.47
Dividend		
Dividend from Investment	909.19	534.82
Others		
Hire charges from others/suppliers	1.74	17.78
Sale of scrap	133.89	88.28
Rentals from staff quarters	12.90	13.97
Misc. receipts	14,174.43	10,479.61
Income from Investment	55.74	117.56
Delayed payment charges from customers	0.01	-
Total	**20,597.95**	**16,038.17**

R.M. KOTHARI & CO. FRN 000143C Chartered Accountants

Notes to the financial statements

(Rs. In Lakh)

29 Employee benefit expenses	For the year ended 31 March 2023	For the year ended 31 March 2022 Restated
Salaries, wages and bonus	14,826.69	13,692.43
Contribution to provident and other funds	2,138.26	2,166.42
Gratuity expenses	802.50	605.72
Payment of ex-gratia	0.40	0.25
Other Employee Costs	313.00	417.06
Staff welfare expenses	20.51	32.95
Total	**18,101.36**	**16,914.83**

29.1 Contribution to Provident and Other Funds include 33.50% of Basic Pay and DA of employees who joined in service prior to 01-01-2004, which has been paid to the ASEB Employees Pension Fund Investment Trust and 14% of Basic Pay and DA of employees who are covered under New Pension Scheme. Payment of Gratuity includes provision for gratuity of employees who are covered under New Pension Scheme.

(Rs. In Lakh)

30 Finance costs	For the year ended 31 March 2023	For the year ended 31 March 2022
Interest expense on:		
- borrowings from govt and others	248.79	208.90
Less: Interest Capitalised	45.15	-
	203.64	208.90
- other borrowing costs	0.62	0.67
Total	**204.26**	**209.57**

30.1 Note: The weighted average capitalisation on the company's general borrowings is 31.21%p.a. (31 March 2022: Nil % p.a.)

30.2 Borrowings from govt and others include		
Interest on State Govt. Loan	88.30	0.09
Interest on GPF	160.49	208.81

30.3 Other Borrowing Costs include Bank Charges and Bank Commissions.

R. M. KOTHARI & CO. FRN 000143C Chartered Accountants

Notes to the financial statements

(Rs. In Lakh)

31	Other expenses	For the year ended 31 March 2023	For the year ended 31 March 2022 Restated
	Repairs And Maintenance Expenses :		
	Repair and Maintenance of Plant and Machinery	837.87	743.53
	Repair and Maintenance of Building	510.48	218.11
	Repair and Maintenance of Other Civil Works	98.71	47.79
	Repair and Maintenance of Lines, Cable Net Works etc.	415.69	352.31
	Printing & stationery	48.64	27.79
	Travelling & conveyance	245.60	176.37
	Insurance charges	310.87	281.61
	Telephone Charges	14.01	12.51
	Postage, Telegram & Tele Charges	2.82	2.40
	Consultancy fees and expenses	41.60	40.45
	Audit Fees	9.84	7.12
	Rent Rates & taxes	50.32	53.87
	Legal charges	14.87	11.48
	Technical fees and other professional fees and expenses	77.39	42.39
	Fees including TA & DA for non official member of the Board	31.07	12.19
	Fees & Subscription	298.55	434.72
	Book and Periodicals	3.33	3.29
	Advertisement and Contributions	45.76	28.19
	Contribution to charities, etc.	210.91	2.87
	Hiring of Vehicles	392.38	308.26
	Electricity Charges	80.77	162.60
	Water charges	0.32	0.45
	Entertainments	24.08	37.69
	Participation fees paid for Training/conference	0.08	0.47
	Training of Staff and Officers	15.43	35.43
	Fees for conducting recruitment & Other Departmental Examinations	1.22	1.37
	Misc. Expenses	6.93	7.89
	Freight expenses	2.28	2.29
	Other Purchase related expenses	8.20	18.41
	Other Miscellaneous Expenses	4.87	0.72
	Repair and Maintenance of Vehicles	20.09	26.86
	Repair and Maintenance of Furniture and Fixtures	11.83	8.55
	Repair and Maintenance of Office Equipment	60.82	47.89
	Miscellaneous losses written off	3,443.52	180.44
	Prior period charges	-	-
	Bulk Supply Tariff	21,970.52	15,388.02
	Total	**29,311.67**	**18,726.33**

(Rs. In Lakh)

Detail of Payment to Auditors	For the year ended 31 March 2023	For the year ended 31 March 2022 Restated
As auditor:		
Audit fee	5.33	5.33
Tax audit fee	0.32	0.32
Others	4.18	1.47
Total	**9.84**	**7.12**

R. M. KOTHARI & CO. FRN 000143C Chartered Accountants

Notes to the financial statements

32 Earnings per share (EPS)

The following reflects the profit and loss share data used for the basic and diluted EPS computations:

Particulars		For the year ended 31 March 2023	For the year ended 31 March 2022 Restated
Net profit/(loss) for calculation of basic EPS	(In Rs.)	41,13,37,730	52,71,23,938
Weighted average number of equity shares for calculating basic EPS		26,93,38,558	99,93,194
Basic earnings/(loss) per share	(In Rs.)	1.53	52.75
Net profit/(loss) for calculation of diluted EPS	(In Rs.)	41,13,37,730	52,71,23,938
Weighted average number of equity shares for calculating diluted EPS		26,93,38,558	99,93,194
Diluted earnings/(loss) per share	(In Rs.)	1.53	52.75

R. M. KOTHARI & CO. FRN 000143C Chartered Accountants

Notes to the financial statements

33 Financial instruments-fair values and accounting classification

The following table provides the fair value measurement hierarchy to the financial assets and financial liabilities of the Company :-

(Rs. In Lakh)

Particulars	As at 31 March 2023		As at 31 March 2022 (Restated)		As at April 1, 2021 (Restated)	
Financial Assets	Carrying Value	Fair Value	Carrying Value	Fair Value	Carrying Value	Fair Value
Amortised cost						
Financial Assets- current						
Trade receivables	14,523.55	14,523.55	14,698.18	14,698.18	14,761.45	14,761.45
Cash and cash equivalents	15,231.59	15,231.59	13,140.84	13,140.84	10,669.03	10,669.03
Bank balance other than cash and cash equivalents	60,244.34	60,244.34	89,418.55	89,418.55	87,274.89	87,274.89
Loans	117.81	117.81	99.69	99.69	97.14	97.14
Other financial assets	10,527.37	10,527.37	10,528.17	10,528.17	10,526.94	10,526.94
Financial Assets- non current		-		-		-
Investments	5,348.20	5,348.20	5,348.20	5,348.20	5,348.20	5,348.20
Other financial assets	48,083.88	48,083.88	8,875.33	8,875.33	2,548.40	2,548.40
Total	**1,54,076.75**	**1,54,076.75**	**1,42,108.96**	**1,42,108.96**	**1,31,226.05**	**1,31,226.05**
Financial Liabilities						
Amortised cost						
Borrowings-non current						
Loans from ADB	-	-	9,567.57	9,567.57	6,048.92	6,048.92
State Govt. Loan	1,151.70	1,151.70	55,152.19	55,152.19	18,926.12	18,926.12
General Provident Fund	2,081.16	2,081.16	2,660.28	2,660.28	3,517.37	3,517.37
Borrowings-current		-		-		-
Repayment due on ADB loan	-	-	-	-	3,518.65	3,518.65
Repayment due on State govt loan	87.90	87.90	-	-	35,347.07	35,347.07
Trade payables	16,896.60	16,896.60	16,896.60	16,896.60	16,896.92	16,896.92
Other financial liabilities- current	49,954.09	49,954.09	61,190.15	61,190.15	71,432.51	71,432.51
Total	**70,171.45**	**70,171.45**	**1,45,466.79**	**1,45,466.79**	**1,55,687.55**	**1,55,687.55**

Financial Instruments-Fair value hierarchy

33.1 The comapany categorizes financial assets and financial liabilities measured at fair value into one of three level depending on the ability to observe inputs employed in their measurement which are described as follows:

i) Level 1 Inputs are quoted prices (unadjusted) in active markets for identical assets or liabilities.

ii) Level 2 Inputs are inputs that are observable, either directly or indirectly, other than quoted prices included within level 1 for the financial asset or financial liabilities.

iii) Level 3 Inputs are unobservable input for the assets or liability reflecting the significant modifications to observable related market data or Company 's assumptions about pricing by market participants.

33.2 Trade receivables, cash and cash equivalents, bank balances other than cash and cash equivalents, other financial assets, trade payables and other financial liabilities have fair value that approximate to their carrying amounts due to their short-term nature.

33.3 There are no transfer between Level 1, Level 2, and Level 3 during the year ended 31 March 2023, 31 March 2022 and 31 March 2021.

34 Financial Risk Management objectives and policies

Financial risk factors

The company's activities expose it to a variety of financial risks; market risk (including currency risks, interest rate risks and price risk), credit risk and liquidity risk. This note presents information about the company's exposure to each of the said risks, the company's objectives, policies and processes for measuring risks and the company's management of capital. Further quantitative disclosures are included throughout these financial statements.

The board of director has overall responsibility for the establishment and oversight of the company's risk management framework. The company's risk management policies are established to identify and analyse the risks faced by the company to set appropriate measures and controls and to monitor risks and adherence to limits. Risks management policies and systems are reviewed regularly to reflect changes in market conditions and in the company's activities.

The company's exposure to the various types of risks associated to its activity and financial instruments is detailed below:

Credit risk

Credit risk is the risk that counterparty will not meet its obligation under a financial instrument or customer contract, leading to a financial loss. Credit risk encompasses of both, the direct risk of default and the risk of deterioration of creditworthiness as well as concentration of risks. Credit risk is controlled by analyzing credit limits and creditworthiness of a customer on a continuous basis to whom the credit has been granted after obtaining necessary approvals for credit. Financial instrument that are subject to concentration of credit risk principally consist of trade receivables, cash and cash equivalents, bank deposits and other financial assets. None of the financial instrument of the Company result in material concentration of credit risk.

R.M. KOTHARI & CO. FRN 000143C Chartered Accountants

Notes to the financial statements

Liquidity risk

Liquidity risk is the risk that the company will encounter in meeting the obligations associated with its financial liabilities that are settled by delivering cash or another financial asset. The approach of the company to manage liquidity is to ensure, as far as possible, that these will have sufficient liquidity to meet their respective liabilities when they are due, under both normal and stressed conditions, without incurring unacceptable losses or risk damage to their reputation.

The table below summarises the maturity profile of financial liabilities of company based on contractual undiscounted payments:

As at 31 March 2023

(Rs. In Lakh)

Particulars	On demand	Within 1 year	1 to 5 years	> 5 years	Total
Borrowings Non-current					
Loans from ADB	-	-	-	-	-
State Govt. Loan	360.61	-	351.60	439.50	1,151.70
General Provident Fund	-	-	2,081.16	-	2,081.16
Borrowings Current					
Repayment due on ADB loan		-			-
Repayment due on State govt loan	-	87.90	-	-	87.90
Other financial liabilities	-	-	-	-	-
Interest accrued and due on borrowings	-	38,614.39	-	-	38,614.39
Trade payables					
Trade payables	-	16,896.60	-	-	16,896.60

As at 31 March 2022 (Restated)

(Rs. In Lakh)

Particulars	On demand	Within 1 year	1 to 5 years	> 5 years	Total
Borrowings Non-current*					
Loans from ADB	-	9,567.57	-	-	9,567.57
State Govt. Loan	-	54,273.19	351.60	527.40	55,152.19
General Provident Fund	-	-	2,660.28	-	2,660.28
Borrowings Current					
Repayment due on ADB loan	-	-	-	-	-
Repayment due on State govt loan	-	-	-	-	-
Other financial liabilities	-	-	-	-	-
Interest accrued and due on borrowings	-	51,368.10	-	-	51,368.10
Trade payables					
Trade payables	-	16,896.60	-	-	16,896.60

As at April 1, 2021 (Restated)

(Rs. In Lakh)

Particulars	On demand	Within 1 year	1 to 5 years	> 5 years	Total
Borrowings Non-current					
Loans from ADB	-	-	6,048.92	-	6,048.92
State Govt. Loan	-	-	18,926.12	-	18,926.12
General Provident Fund	-	-	3,517.37	-	3,517.37
Borrowings Current					
Repayment due on ADB loan	-	3,518.65	-	-	3,518.65
Repayment due on State govt loan	-	35,347.07	-	-	35,347.07
Other financial liabilities					
Interest accrued and due on borrowings	-	64,210.02	-	-	64,210.02
Trade payables					
Trade payables	-	16,896.92	-	-	16,896.92

35 Market Risk

Market risk is the risk that the Company's assets and liabilities will be exposed to due to a change in market prices such as foreign exchange rates and interest rates that determine the valuation of these financial instruments. Financial instruments affected by market risk include receivables, payables, and loans and borrowings.

(a) Foreign currency risk exposure:

The Company operates in india only and it is not exposed to foreign exchange risk arising from foreign currency transactions. Foreign exchange risk arises from future commercial transactions and recognised assets and liabilities denominated in a currency that is not the company's functional currency (INR). The risk is measured through a forecast of highly probable foreign currency cash flows. The objective of the hedges is to minimise the volatility of the INR cash flows of highly probable forecast transactions.

(b) Foreign Currency Sensitivity Analysis

The sensitivity of profit or loss to changes in the exchange rates arises mainly from foreign currency denominated financial instruments and the impact on other components of equity arises from foreign forward exchange contracts, foreign exchange option contracts designated as cash flow hedges.

R. M. KOTHARI & CO. FRN 000143C Chartered Accountants

Notes to the financial statements

36 Contingent Liabilities and Commitments (to the extent not provided for)

(Rs. In Lakh)

Particulars	As at 31 March 2023	As at 31 March 2022	As at April 1, 2021
Contingent Liabilities	-	-	-
Commitment			
Estimated amount of contracts remaining to be executed on capital account and not provided for	-	-	-

37 Details of dues to Micro, Small and Medium Enterprises as defined under the MSMED Act, 2006

Information as required to be furnished as per section 22 of the Micro, Small and Medium Enterprises Development Act, 2006 (MSMED Act) for the year ended March 31, 2023 is given below. This information has been determined to the extent such parties have been identified on the basis of information available with the Company.

	Particulars	As at 31 March 2023	As at 31 March 2022	As at April 1, 2021
a	the principal amount and the interest due thereon (to be shown separately) remaining unpaid to any supplier at the end of each accounting year;	-	-	-
b	the amount of interest paid by the buyer in terms of section 16 of the Micro, Small and Medium Enterprises Development Act, 2006 (27 of 2006), along with the amount of the payment made to the supplier beyond the appointed day during each accounting year;	-	-	-
c	the amount of interest due and payable for the period of delay in making payment (which has been paid but beyond the appointed day during the year) but without adding the interest specified under the Micro, Small and Medium Enterprises Development Act, 2006;	-	-	-
d	the amount of interest accrued and remaining unpaid at the end of each accounting year; and	-	-	-
e	the amount of further interest remaining due and payable even in the succeeding years, until such date when the interest dues above are actually paid to the small enterprise, for the purpose of disallowance of a deductible expenditure under section 23 of the Micro, Small and Medium Enterprises Development Act, 2006.	-	-	-

38 Related Party Disclosure

Related Parties names and relationship

Name of Party		Relation (Key Management Personnel)
Debajyoti Das (01.04.2022 to 31.03.2023)	As at 31 March 2023	Managing Director
D.J. Hazarika (W.e.f. 01.04.2021 to 31.10.2021) D. Deka (W.e.f. 01.11.2021 to 20.01.2022) Debajyoti Das (W.e.f. 21.01.2022 to 31.03.2022)	As at 31 March 2022	Managing Director
D.J. Hazarika (W.e.f. 01.04.2020 to 31.03.2021)	As at April 1, 2021	Managing Director

Related parties transaction and balance

(in Rs.)

Nature of transaction	As at 31 March 2023	As at 31 March 2022	As at April 1, 2021
Salary/ Remuneration	28,52,001	16,14,652	Nil

39 Segment Reporting

The company is governed by the Electricity Act, 2003.The Company's primary activities entail transmission of electricity to APDCL. This is the only activity performed and is thus also the main source of risks and returns. The Company's segments as reviewed by the Chief Operating Decision Maker (CODM) does not result into identification of different ways/ sources into which they see the performance of the Company. Accordingly, the company has a single reportable and geographical segment i.e Transmission of electricity and operating in India respectively. Hence, the relevant disclosures as per Ind AS 108, Operating Segments are not applicable to the company.

40 Capital management

(a) Risk management

The Company's objectives when managing capital are to safeguard their ability to continue as a goning concern, so that they can continue to provide return for shareholders and benefits for other stakeholders and maintain an optimal capital structure to reduce the cost of capital.

Consistent with others in the industry, the company monitors capital on the basis of the followings gearing ratio:
Net debt (total borrowings net of cash and cash equivalents)
divided by
Total 'equity' (as shown in the balance sheet, including non-controlling interests)
The company's gearing ratio was as follows:

Particulars		As at 31 March 2023	As at 31 March 2022	As at April 1, 2021
Net debt	(Rs. In lakhs)	(11,910.83)	54,239.20	56,689.10
Total equity	(Rs. In lakhs)	2,54,302.08	1,85,219.86	1,78,659.75
Net debt to equity ratio		**(0.05)**	**0.29**	**0.32**

In order to achieve this overall objective, the company's capital management amongst other things, aims to ensure that it meets financial covenants attached to the interest bearing loans and borrowing that define capital structure requirement. Breaches in meeting the fianancial covenants would permit the bank to immediately call loans and

R. M. KOTHARI & CO. FRN 000143C Chartered Accountants

Notes to the financial statements

41 Other Statutory Information

(i) The title deeds of all the immovable properties disclosed in the financial statements included in property, plant and equipment and capital work-in progress (other than properties where the Company is the lessee and the lease agreements are duly executed in favour of the lessee) are held in the name of the Company as at the balance sheet date except the following for which the process of collecting the title deeds is in progress:

Description of the Property	Carrying Value (in Rs.)	Held in name of	Whether promotor, director, or their relative or employee	Period held indicate range, where appropriate	Reason for not held in the name of company
Land	11,59,15,777	AEGCL	No	ASEB/AEGCL Period	

(ii) The Company has not revalued any of its Property, Plant and Equipment during the current reporting period and for previous year's reporting period.

(iii) The Company has not granted any loans or advances to promoters, directors, KMPs and the related parties (as defined under the Companies Act 2013, either severally or jointly with any other person, that are (a) repayable on demand, or (b) without specifying any terms or period of repayment.

(iv) The company has disclosed capital work in progress as on 31.03.2023

(v) The Company does not have any intangible assets under development during the current and previous year reporting period.

(vi) The Company does not hold any Benami Property and hence there were no proceedings initiated or pending against the Company for holding any benami property under the Benami Transactions (Prohibitions) Act, 1988 and the Rules made there under.

(vii) The company has borrowings from banks or governnment on the basis of security of current assets and quarterly returns or statements of current assets filed by the Company with banks or financial institutions are in agreement with the books of accounts.

(viii) The company is not declared willful defaulter by any bank or financial institution or other lender during the year.

(ix) The company does not have any transactions with companies struck off under section 248 of the Companies Act,2013 or section 560 of Companies Act, 1956.

(x) The Company does not have any charges or satisfaction which is yet to be registered with ROC beyond the statutory period.

(xi) The Company does not have investment in any downstream companies for which it has to comply with the number of layers prescribed under Clause (87) of Section 2 of the Companies Act, 2013 read with Companies (Restriction on number of layers) Rules, 2017.

(xii) The Company has not advanced or loaned or invested funds to any other person(s) or entity(ies), including foreign entities (Intermediaries) with the understanding that the Intermediary shall:-

(a) directly or indirectly lend or invest in other persons or entities identified in any manner whatsoever by or on behalf of the company (ultimate beneficiaries) or

(b) provide any guarantee, security or the like to or on behalf of the ultimate beneficiaries.

(xiiii) The Company has not received any fund from any person(s) or entity(ies), including foreign entities (funding party) with the understanding (whether recorded in writing or otherwise) that the Company shall:

(a) directly or indirectly lend or invest in other persons or entities identified in any manner whatsoever by or on behalf of the funding party (ultimate beneficiaries) or

(b) provide any guarantee, security or the like on behalf of the ultimate beneficiaries.

(xiv) The Company does not have any such transactons which was not recorded in the books of accounts that has been surrendered or disclosed as income during the year in the tax assessments under the Income Tax Act, 1961 such as, search or survey or any other relevant provisions of the Income Tax Act, 1961.

(xv) The Company has not traded or invested in Crypto Currency or Virtual Currency during the financial year.

(xvi) The Company is not required to comply with the provisions of Section 135 of the Companies Act, 2013.

R. M. KOTHARI & CO. FRN 000143C Chartered Accountants

Notes to the financial statements

42 First Time adoption to Ind AS

The company has adopted Ind AS with effect from April 1, 2021 with comparatives being restated. Accordingly the impact of transition has been provided in the Opening Reserves as at April 1, 2021. The figures for the previous period have been restated, regrouped and reclassified wherever required to comply with the requirement of Ind AS and Division II to Schedule III. This note explains the principle adjustments made by the company in restating its Indian GAAP financial statements, including the balance sheet as at 1st April, 2021, and financial statements as at and for the year ended 31st March, 2022.

(a) The company has opted to avail the deemed cost exemption of Ind AS 101 and accordingly carry with the gross book value and accumulated depreciation of Property, Plant and Equipment as per Previous GAAP as at March 31, 2021 as deemed cost as at April 1, 2021 under Ind AS.

(b) In case estimates were required under previous GAAP as at Transition date and comparative date, the company has used same estimates under Ind AS for the same items. If new estimates are required to made under Ind AS, which were not required to be made under Indian GAAP, The company has made new estimates.

(c) The Classification and measurement of financial assets and liabilities are made on the basis of facts and circumstances i.e criteria of Ind AS 109 met on the date of transition to Ind AS.

(d) Other Comprehensive Income

Under Indian GAAP, the company was not required to present other comprehensive income. Hence, it has reconciled Indian GAAP profit or loss to Profit or loss as per Ind AS. Further, Indian GAAP profit or loss is reconciled to total comprehensive income as per Ind AS.

Footnote to the reconciliation of equity as at April 1, 2021 and March 31, 2022 and reconciliation of profit and loss for the year ended March 31, 2022

(i) Right to use assets and Lease liability

Previous GAAP is not required to recognise right to use assets and finance lease obligation by lessee. On the other hand, under Ind AS, the company has recognised right to use assets at carrying value as if Ind AS 116 had been applied since commence date of the lease. Also the company has recognised lease liability as nil as there is no remaining lease payments at the date of transition to Ind AS. The company has recognised depreciation on right to use assets over the period of lease deed.

(ii) Grants

In Previous GAAP, the company has recognised government grant as capital reserves as promoter's contribution but under Ind AS, the company has recognised grants in other equity till the date of transition to Ind AS i.e April 1, 2021. Further the company has recognised the amount of grants received during the year 2021-2022 amounting to Rs. 22,646.65 lakhs under non current liability. Expenses related to projects grants are capitalised under capital work in progress/Fixed Assets. The company recognised amount of such grant in the Statement of Profit and Loss to the extent of depreciation charged to statement of profit and loss.

(iii) Prior period errors

a) In previous GAAP, the company has recognised waiver of interest on borrowings under other income instead of deducting from capital work in progress as interest was capitalised to capital work in progress in past years. Now interest waiver on loan for the year has been deducted from capital work in progress and retained earning adjusted accordingly.

b) In previous GAAP, the company had recognised prior period expenses and income in other expenses in statement of Profit and Loss. Now the company has adjusted the same in retained earnings and balances are restated at the date of transition to Ind AS.

c) In previous GAAP, the company had recognised addition of property, plant and equipment net of depreciation of financial year 2021-2022. Now the company has restated the balances of Property, plant and equipment, retained earnings at the date of transition to Ind AS.

R. M. KOTHARI & CO. FRN 000143C Chartered Accountants

43.1 Reconciliation of equity as at April 1, 2021 (Transition date)

(Rs. In Lakh)

Particulars	Notes	Regrouped IGAAP	Adjustments	Ind AS
Assets				
(I) Non-current assets				
(a) Property, plant and equipment	3a	1,18,666	18,903.34	1,37,569.34
(b) Right of use assets	3b	-	25.29	25.29
(c) Capital work in progress	4	80,332	(23,227.86)	57,104.14
(d) Financial assets				
(i) Investments	5	5,348	0.20	5,348.20
(ii) Other financial assets	6	-	2,548.40	2,548.40
(e) Other non-current assets	7	27	930.10	957.10
Total non-current assets		**2,04,373**	**(820.53)**	**2,03,552.47**
(II) Current assets				
(a) Inventories	8	1,449	935.39	2,384.39
(b) Financial assets				
(i) Trade receivables	9	14,761	0.45	14,761.45
(ii) Cash and cash equivalents	10	1,00,244	(89,574.97)	10,669.03
(iii) Bank balances other than cash and cash equivalents	11	-	87,274.89	87,274.89
(iv) Loans	12	2,844	(2,746.86)	97.14
(v) Other financial assets	13	-	10,526.94	10,526.94
(c) Current tax assets (net)	14	-	2,676.24	2,676.24
(d) Other current assets	15	38,348	(10,116.14)	28,231.86
Total current assets		**1,57,646**	**(1,024.06)**	**1,56,621.94**
Total assets		**3,62,019**	**(1,844.59)**	**3,60,174.41**
Equity and liabilities				
(1) Equity				
(a) Equity share capital	16	9,993	0.19	9,993.19
(b) Other equity	17	1,68,386	280.56	1,68,666.56
Total equity		**1,78,379**	**280.75**	**1,78,659.75**
(2) Liabilities				
(I) Non-current liabilities				
(a) Grants	18		221.00	221.00
(b) Financial liabilities			-	
Borrowings	19	28,492	0.41	28,492.41
(b) Provisions	20	303	0.45	303.45
(c) Deferred tax liabilities (net)		-	-	-
Total non-current liabilities		**28,795**	**221.87**	**29,016.87**
(II) Current liabilities				
(a) Financial liabilities				
(i) Borrowings	21	-	38,865.72	38,865.72
(ii) Trade payables	22		-	
(a) Total outstanding dues of micro enterprises and small enterprises		-	-	-
(b) Total outstanding dues of creditors other than micro enterprises and small enterprises		19,141	(2,244.08)	16,896.92
(iii) Other current financial liabilities	23	-	71,432.51	71,432.51
(b) Other current liabilities	24	1,33,215	(1,10,405.54)	22,809.46
(c) Provisions	25	2,489	4.19	2,493.19
(d) Current tax liability (net)	26	-	-	-
Total current liabilities		**1,54,845**	**(2,347.21)**	**1,52,497.79**
Total liabilities		**1,83,640**	**(2,125.34)**	**1,81,514.66**
Total equity and liabilities		**3,62,019**	**(1,844.59)**	**3,60,174.41**

The Audited numbers of Balance Sheet and Profit and Loss under IGAAP is reclassified and regrouped as per heading and titles of Ind AS for showing reconciliations from Indian GAAP to Ind AS. Hence, Financial assets and liabilities which are required to be shown under Ind AS is shown under Indian GAAP heading in above reconciliations.

R. M. KOTHARI & CO. FRN 000143C Chartered Accountants

0037

43.2 Reconciliation of equity as at March 31, 2022

(Rs. In Lakh)

Particulars	Notes	Regrouped IGAAP	Adjustments	Ind AS
Assets				
(I) Non-current assets				
(a) Property, plant and equipment	3a	1,22,216	14,685.74	1,36,901.74
(b) Right of use assets	3b		24.39	24.39
(c) Capital work in progress	4	90,413	(27,548.44)	62,864.56
(d) Financial assets				
(i) Investments	5	5,348	0.20	5,348.20
(ii) Other financial assets	6	-	8,875.33	8,875.33
(e) Other non-current assets	7	36	7,236.94	7,272.94
Total non-current assets		**2,18,013**	**3,274.15**	**2,21,287.15**
			-	
(II) Current assets				
(a) Inventories	8	1,654	683.64	2,337.64
(b) Financial assets				
(i) Trade receivables	9	14,797	(98.82)	14,698.18
(ii) Cash and cash equivalents	10	1,11,395	(98,254.16)	13,140.84
(iii) Bank balances other than cash and cash equivalents	11	-	89,418.55	89,418.55
(iv) Loans	12	2,811	(2,711.31)	99.69
(v) Other financial assets	13	-	10,528.17	10,528.17
(c) Current tax assets (net)	14	-	2,648.74	2,648.74
(d) Other current assets	15	40,261	(10,277.72)	29,983.28
Total current assets		**1,70,918**	**(8,062.91)**	**1,62,855.09**
			-	
Total assets		**3,88,930**	**(4,787.75)**	**3,84,142.25**
			-	
Equity and liabilities			-	
(1) Equity			-	
(a) Equity share capital	16	9,993	0.19	9,993.19
(b) Other equity	17	2,02,594	(27,367.33)	1,75,226.67
Total equity		**2,12,587**	**(27,367.14)**	**1,85,219.86**
			-	
(2) Liabilities			-	
(I) Non-current liabilities			-	
(a) Grants	18	-	22,648.62	22,648.62
(b) Financial liabilities				
Borrowings	19	67,382	(1.96)	67,380.04
(b) Provisions	20	682	(3.14)	678.86
(c) Deferred tax liabilities (net)		-	-	-
Total non-current liabilities		**68,064**	**22,643.53**	**90,707.53**
(II) Current liabilities				
(a) Financial liabilities				
(i) Borrowings	21	-	-	-
(ii) Trade payables	22	-	-	-
(a) Total outstanding dues of micro enterprises and small enterprises		-	-	-
(b) Total outstanding dues of creditors other than micro enterprises and small enterprises		16,897	(0.40)	16,896.60
(iii) Other current financial liabilities	23		61,190.15	61,190.15
(b) Other current liabilities	24	88,607	(61,253.83)	27,353.17
(c) Provisions	25	2,775	(0.05)	2,774.95
(d) Current tax liability (net)	26		-	-
Total current liabilities		**1,08,279**	(64.13)	**1,08,214.87**
			-	
Total liabilities		**1,76,343**	**22,579.40**	**1,98,922.40**
			-	
Total equity and liabilities		**3,88,930**	**(4,787.75)**	**3,84,142.25**

The Audited numbers of Balance Sheet and Profit and Loss under IGAAP is reclassified and regrouped as per heading and titles of Ind AS for showing reconciliations from Indian GAAP to Ind AS. Hence, Financial assets and liabilities which are required to be shown under Ind AS is shown under Indian GAAP heading in above reconciliations.

R.M. KOTHARI & CO. FRN 000143C Chartered Accountants

0038

43.3 Reconciliation of Profit and Loss for the year ended March 31, 2022

(Rs. In Lakh)

Particulars	Notes	Regrouped IGAAP	Adjustments	Ind AS
Income:				
Revenue from operations	27	37,929	(101.11)	37,827.89
Other income	28	18,899	(2,860.83)	16,038.17
Total income		**56,828**	**(2,961.94)**	**53,866.06**
Expenses:				
Employee benefits expense	29	16,986	(71.17)	16,914.83
Depreciation and amortization expense	3a	12,410	334.09	12,744.09
Finance costs	30	210	(0.43)	209.57
Other expenses	31	16,676	2,050.33	18,726.33
Total expenses		**46,282**	**2,312.82**	**48,594.82**
Profit before exceptional items and tax		**10,546**	**(5,274.76)**	**5,271.24**
Exceptional items		-		-
Profit before tax		**10,546**	**(5,274.76)**	**5,271.24**
Tax expense				
Current tax		-		-
Deferred tax		-		-
Profit for the period		**10,546**	**(5,274.76)**	**5,271.24**
Other comprehensive income				
Items that will not be reclassified to profit or loss				
Re-measurement gains/(losses) on defined benefit plan		-	-	-
Income tax effect		-	-	-
Other comprehensive income		-	-	-
Total comprehensive income		**10,546**	**(5,274.76)**	**5,271.24**

The Audited numbers of Balance Sheet and Profit and Loss under IGAAP is reclassified and regrouped as per heading and titles of Ind AS for showing reconciliations from Indian GAAP to Ind AS. Hence, Financial assets and liabilities which are required to be shown under Ind AS is shown under Indian GAAP heading in above reconciliations.

R. M. KOTHARI & CO. FRN 000143C Chartered Accountants

As per the Directive 3 (Segregation & Strengthening of SLDC) of the Tariff Order dated 07.03.2020 issued by the Assam Electricity Regulatory Commission (AERC), the income/expense pertaining to SLDC included in the "STATEMENT OF PROFIT & LOSS ACCOUNT FOR THE YEAR ENDED 31.03.2023" is shown in the following table.

STATEMENT OF INCOME & EXPENSE ACCOUNT OF SLDC FOR THE YEAR ENDED 31ST MARCH, 2023

(₹ Lakh)

Particulars	Year ended 31st March, 2023	Year ended 31st March, 2022
I.INCOME		
(a) Revenue From Operations	695	736
(b) Other Income	16	14
Total Revenue ::	711	**750**
II. EXPENDITURE		
(a) Employee Benefits Expense	608	587
(b) Repair & Maintenance Expenses	55	103
(c) Administration & General Expenses	52	52
(d) Finance Costs	-	-
(e) Depreciation and Amortization Expenses	33	31
(f) Net Prior Period Charges/(Credits)	-	(1)
Total Expenses ::	748	**772**
Profit (Loss) Before Tax (I-II)	(37)	**(22)**
III. TAX EXPENSES		
(a) Current Tax	-	-
(b) Deferred Tax	-	-
Profit (Loss) for the period	(37)	**(22)**

R. M. KOTHARI & CO. FRN 000143C Chartered Accountants

Ratio Analysis for the year ended 31st March,2023

Sl.No	Particulars	Numerator	As on 31.03.2023 (Rs. In Lakh)	As on 31.03.2022 (Rs. In Lakh)	Denominator	As on 31.03.2023 (Rs. In Lakh)	As on 31.03.2022 (Rs. In Lakh)	Ratio as on 31.03.2023	Ratio as on 31.03.2022
1	**Current Ratio**	**Current Asset**			**Current Liabilities**				
	[Current Asset/Current Liabilities]	Inventories	3289.68	2337.64	Loans	87.90	0.00		
		Trade Receivable	14523.55	14698.18	Other financial liabilities	49954.09	61190.15		
		Cash & cash equivalent	15231.59	13140.84	Trade Payble	16896.60	16896.60		
		Bank Balance other than Cash & Cash equivalent	60244.34	89418.55	Other current liabilities	29051.45	27353.17		
		Loans	117.81	99.69	Provisions	3958.64	2774.95		
		Other Financial asset	10527.37	10528.17					
		Income Tax Asset (Net)	2583.72	2648.74					
		Any Other Current Asset	31474.74	29983.28					
			137992.80	162855.09		99948.67	108214.87	1.38	1.50
2	**Debt Equity Ratio**	**Total Borrowings**			**Shareholder's Equity**				
	[Total Borrowings/Shareholder's Equity]	Borrowings	3232.86	67380.04	Equity Share Capital	269338.56	9993.19		
		Repayment due on State govt. Loan	87.90	0.00					
			3320.76	67380.04		269338.56	9993.19	0.01	6.74
3	**Debt Service Coverage Ratio**	**Earnings Availabe for debt service**			**Total Debt Service**				
		Net Profit/(Loss) before exceptional item	4113.38	5271.24	Finance Cost-Interest	204.26	209.57		
		Depreciation & amortisation expn.	13093.25	12744.09	Repayment of Loan	87.90	0.00		
		Finance Cost	204.26	209.57					
		Net Loss on sale of fixed asset	0.00	0.00					
			17410.89	18224.90		292.16	209.57	59.59	86.96
4	**Return on Equity**	**Profit for the period**			**Aver. Shareholders Equity**				
		Net profit after Tax - Pref. Dividend (if any)	4113.38	5271.24	(Beginning Shareholders equity + Ending Shareholders equity)/2	144662.48	9993.00		
			4113.38	5271.24		144662.48	9993.00	0.03	0.53

R.M. KOTHARI & CO. FRN 000143C Chartered Accountants

Sl.No	Particulars	Numerator	As on 31.03.2023 (Rs. In Lakh)	As on 31.03.2022 (Rs. In Lakh)	Denominator	As on 31.03.2023 (Rs. In Lakh)	As on 31.03.2022 (Rs. In Lakh)	Ratio as on 31.03.2023	Ratio as on 31.03.2022
5	**Inventory Turnover Ratio**	**Cost of Goods Sold**			**Average Inventory**				
		Net sale	44225.97	37827.89	(opening stock+closing stock)/2	2813.66	2361.02		
			44225.97	37827.89		2813.66	2361.02	15.72	16.02
6	**Trade Receivable Turnover Ratio**	**Net Credit sale**			**Average Trade Receivable**				
		Annual Revenue from operation on Credit	44225.97	37827.89	(opening Trade Receivable+Closing Trade Receivable)/2	14610.87	14729.82		
			44225.97	37827.89		14610.87	14729.82	3.03	2.57
7	**Trade Payable Turnover Ratio**	**Net credit purchase**			**Average Trade Payble**				
		Net credit purchase-Purchase return	NA	NA	(opening Trade Payble+Closing Trade Payble)/2	NA	NA		
			0	0		0	0	-	-
8	**Net Capital Turnover Ratio**	**Net Sales**			**Capital employed**				
		Total Sales -Sales Return	44225.97	37827.89	Total asset- current liabilities	309926.42	275927.38		
			44225.97	37827.89		309926.42	275927.38	0.14	0.14
9	**Net Profit ratio**	**Net Profit**			**Net Sales**				
		Net profit after Tax	4113.38	5271.24	sales	44225.97	37827.89		
			4113.38	5271.24		44225.97	37827.89	0.09	0.14
10	**Return on Capital Employed**	**EBIT**			**Capital employed**				
		Earnings Before Interest & Tax	4317.64	5480.81	Total asset- current liabilities	309926.42	275927.38		
			4317.64	5480.81		309926.42	275927.38	0.01	0.02

R. M. KOTHARI & CO. FRN 000143C Chartered Accountants

0042

Notes to the financial statements

44 Previous year figures have been re-arranged and re-grouped wherever necessary.

Summary of significant accounting policies	1-2
The accompanying notes are an integral part of the financial statements	3-44

As per our report of even date
For
ICAI Firm Registration No.:
Chartered Accountants

CA
Partner
Membership No.:

Place: Guwahati
Date:
UDIN: 23413362BGYSRB3506

For R. M. KOTHARI & CO.
Chartered Accountants
(Prateek Kothari)
PARTNER
M. No. 413362

For and on behalf of the Assam Electricity Grid Corporation Private Limited

(D.Das)
Managing Director
DIN-09702957

(N K Baishya)
Independent Director
DIN-09230144

(P.K. Barman)
CGM (F&A)
PAN :AETPB6712P

(D. Barua)
Company Secretary
Membership No. : FCS-4033

0043

Annexure-II
Energy Balance for FY 2022-23
Certified by SLDC

ANNEXURE-II

TRANSMISSION LOSS OF AEGCL FOR THE FY 2022-23		
Sl. No.	Particulars	in MU
1	**Energy Injected**	**11452.470**
1.1	Energy Injected by APGCL	2134.996
1.2	Energy Injected by CSGS (ER & NER)	8377.188
1.3	Energy Injected by LTA	295.733
1.4	Energy Injected by Power Exchanges	1494.927
1.5	Energy Injected by IPPs	240.170
1.6	Energy Injected by CPPs	1.453
1.7	Energy Injected through DSM	-4.896
1.8	Energy Sale through Power Exchanges(-)	1087.101
2	**Total Energy sent out**	**11073.626**
2.1	Energy sent out to APDCL	10985.257
2.2	Energy sent out to Inter state OA customers	82.356
2.3	Energy sent out to Intra state OA customers	6.013
3	**Transmission loss (MU)**	**378.844**
4	**Transmission loss (%)**	**3.31**

Prepared by:

JM, MO, SLDC, AEGCL

AM, MO, SLDC, AEGCL

Checked by:

AGM, MO, SLDC, AEGCL

DGM, Operations, SLDC, AEGCL

AGM, TRC, APDCL

Asstt. General Manager, Com TRC
APDCL, Bijulee Bhawan, Guwahati

Countersigned by:

21/6/23

CGM,SLDC
AEGCL Kahilipara

CGM, SLDC, AEGCL

Annexure-III
Energy Audit Report
FY 2022-23 & FY 2023-24

Energy Audit Report

Power Transmission Network of Assam Electricity Grid Corporation Ltd.

TABLE OF CONTENTS

1 INTRODUCTION 4

1.1 BACKGROUND 4
1.2 CONSTITUTION OF THE COMMISSION 5
1.3 AEGCL ASSET DETAILS 6

2 OBJECTIVE : ENERGY AUDIT 7

3 METHODOLOGY 8

4 ENERGY AUDIT FOR FY 2022-23 12

4.1 TRANSMISSION LOSS FOR FY 2022-23 12
4.2 ENERGY BALANCE IN FY 2022-23 14
4.3 MONTHLY ENERGY BALANCE OF AEGCL IN FY 2022-23 14

5 ENERGY AUDIT FOR FY 2023-24 17

5.1 TRANSMISSION LOSS FOR FY 2023-24 17
5.2 ENERGY BALANCE IN FY 2023-24 19

6 ANALYSIS AND CONCLUSION 20

6.1 ANALYSIS 20
6.2 TRANSMISSION LOSS SCENARIO 20
6.3 SAMAST 20
6.4 PROGRESS REPORTS OF SAMAST 22
6.5 ANALYSIS OF TRANSMISSION LOSSES 23
6.6 LINE LOSSES 24
6.7 TRANSFORMER LOSSES 24
6.8 POTENTIAL METHODS OF REDUCING TRANSMISSION LOSS 24

LIST OF TABLES

TABLE 1: TRANSMISSION LINE LENGTH (CKT KM) OF AEGCL 6
TABLE 2: NO OF GRID SUBSTATIONS OF AEGCL 6
TABLE 3: TRANSMISSION LOSS FOR FY 2022-23 12
TABLE 4: TRANSMISSION LOSS OF AEGCL IN FY 2022-23 14
TABLE 5: MONTHLY ENERGY BALANCE OF AEGCL IN FY 2022-23 14
TABLE 6: TRANSMISSION LOSS FOR FY 2023-24 17
TABLE 7: TRANSMISSION LOSS OF AEGCL IN FY 2022-23 19

LIST OF FIGURES

FIGURE 1 GENERIC SLD FOR AEGCL 11
FIGURE 2 TRANSMISSION LOSS OF AEGCL IN FY 2022-23 15

1 INTRODUCTION

Power Transmission in a vital link between power generation and power distribution. Till recently, India was struggling with the power deficit. With generation delicensed, India has sufficient generation capacity. However, lack of transmission capacity was a big challenge. For achieving the target of "Power for All", a robust transmission network is must. Therefore, power sector has recognized the importance of integrated transmission planning and this sector has also garnered substantial private investment in last decade.

India's transmission sector is primarily controlled by Government owned Companies. At Central Level, PGCIL, the Central Transmission Utility is responsible for national and inter-regional transmission network planning and at State Level, respective State Transmission Utilities are responsible for State level Transmission Planning. Historically, the power transmission business had been a monopoly as almost all projects were awarded either to PGCIL or state utilities on a regulated basis.

1.1 Background

1.1.1 From Mid-90s, the focus has been shifted on to consumer and availability of economic power to all. Over the last few years, there has been significant interest in opening the Electricity sector to competition and, by extension, interest in designing electricity markets to push the sector toward more efficient outcomes. Accordingly, the Electricity Act, 2003 ("the Act" or "EA 2003") was enacted with effect from June 10, 2003 which requires the State Governments to initiate major changes in the structure and operations of the State power sector.

1.1.2 Objectives of the Electricity Act, 2003 includes Promote competition, Rationalization of tariff, Protect consumer's interest. Promoting competition in electricity sector is one of the primary objectives of the Electricity Act, 2003.

1.1.3 The Electricity Act 2003 required restructuring of the State owned vertically integrated electricity boards (SEBs). Sections 131 to 134 mandate reorganization of the SEBs into functional entities and corporatization of the same.

1.1.4 The State of Assam has undertaken structural reforms in the state electricity sector in 2004 pursuant to the provisions of the Electricity Act 2003. At present, the Assam Power Generation Company Limited (APGCL), Assam Electricity Grid Corporation Limited (AEGCL) and Assam Power Distribution Company Limited (APDCL) are functioning as the State-owned generation, transmission and distribution utilities respectively. AEGCL is notified as the State Transmission Utility (STU). Its core business is to efficiently transport electrical power from electrical power bulk heads to the distribution company networks in the state of Assam.

1.1.5 The State Load Dispatch Centre (SLDC) is the apex body constituted vide Section 31 of the Indian Electricity Act - 2003 (Central Act No. 36 of 2003) and complies with the directions stipulated in Section 33 to ensure integrated operation of the power system in the state of Assam. SLDC, ASSAM was established in the year 1983 is located at Kahilipara, Guwahati. SLDC, Assam is presently being operated by the state transmission utility of Assam i.e. Assam Electricity Grid Corporation Ltd. (AEGCL).

1.2 Constitution of the Commission

1.2.1 The Assam Electricity Regulatory Commission (hereinafter referred to as the AERC or the Commission) was established under the Electricity Regulatory Commissions Act, 1998 (14 of 1998) on February 28, 2001. The first proviso of Section 82(1) of the Electricity Act, 2003 (hereinafter referred as the Act or the EA, 2003) has ensured continuity of the Commission under the Electricity Act, 2003.

1.2.2 The Commission is mandated to exercise the powers and functions conferred under Section 181 of the Electricity Act, 2003 (36 of 2003) and to exercise the functions conferred on it under Section 61, 62 and 86 of the Act from June 10, 2003.

1.2.3 In accordance with the regulations 'AERC (Terms and Conditions for determination of Multi Year Tariff) Regulations, 2021, (hereinafter to be referred as MYT Regulations 2021' issued by the AERC, AEGCL has to file Tariff Petition every year with the Commission, which includes statements containing calculation of the expected aggregate revenue from charges under its currently approved tariff and the expected cost of providing services i.e. Aggregate Revenue Requirement (ARR) during the Previous Year, Current Year and Ensuing Year & tariff proposals so as to fully cover the gap between the expected aggregate revenue at the prevalent tariff and the expected cost of services including schemes for reduction in loss levels and other efficiency gains to be achieved.

1.2.4 Accordingly, AEGCL had filed its petition for determination of Aggregate Revenue Requirement (ARR) for FY 2023-24 under section 61, 62 & 64 of the Electricity Act, 2003. before the Commission on November 2022, in accordance with MYT Regulations of AERC. After carrying out the due process of technical validation & arranging hearing the objections of various stake holders, AERC has issued an order on 29th March, 2023 wherein certain directives were issued to AEGCL in relation with carrying out energy audit which are reproduced as below:

"***Directive 2 – Energy Audit and Implementation of SAMAST***

The Commission directs AEGCL to carry out the Energy Audit every year and submit the report based on the metered energy at different interconnection points, including the status of metering,

functional meters, etc. This Report, with details of Transmission Losses, should be submitted along with the next Tariff Petition. AEGCL is directed to earnestly pursue the implementation of SAMAST."

1.2.5 In response to the directives of AERC, AEGCL has decided to get the preliminary energy audit done of the transmission network to quantify the losses & to identify the saving potential out of these losses.

1.3 AEGCL Asset details

1.3.1 As on FY 2022-23, AEGCL has 5968.48Ckt km line length & 76 nos. of Substations. AEGCL has commissioned 158.83 km in FY 2022-23 and many projects are in pipeline which will be commissioned during FY 2023-24 and FY 2024-25 to meet upcoming load development & give load relief to the network of AEGCL.

1.3.2 The electric supply from AEGCL to APDCL is transferred through 400 kV, 220 kV, 132 kV and 66 kV transmission line network with transformation capacity of 7523.5MVA. Details of AEGCL transmission line length and nos. of substations for FY 2020-21, FY 2021-22 and FY 2022-23 are mentioned below:

Table 1: Transmission Line Length (Ckt km) of AEGCL

S. No	Particulars	Unit	2022-23	2021-22	2020-21
1	**Transmission Line Length**	**Ckt. km**	**5968.48**	**5809.65**	**5737.45**
2	400 kV	Ckt. km	7.20	7.20	7.20
3	220 kV	Ckt. km	2048.50	2048.50	2048.05
4	132 kV	Ckt. km	3299.78	3140.95	3069.19
5	66 kV	Ckt. km	613.00	613.00	613.00

Table 2: No of Grid Substations of AEGCL

S. No	Particulars	Unit	2022-23	2021-22	2020-21
1	**No. of Grid Substation**		**76**	**69**	**67**
2	400/220/132/33 kV	No.	1	1	1
3	220/132 kV	No.	1	1	1
4	220/132/66/33 kV	No.	1	1	1
5	220/132/33 kV	No.	9	9	9
6	220/33 kV	No.	1	1	1
7	132/66/33 kV	No.	1	1	1
8	132/33 kV	No.	61	54	52
9	132/11 kV	No.	1	1	1

2 OBJECTIVE : ENERGY AUDIT

2.1.1 Energy Audit is the key to systematic approach for decision making in energy management. It is an effective tool to balance the total energy inputs with its outflows in various energy streams.

2.1.2 The energy audit exercise of transmission utility involves the energy accounting followed by the analysis of energy flow data for determination of losses at various steps in transmission. Since the ultimate burden of these losses has to be borne by the honest consumers in terms of higher tariff rates, the reduction in losses would also be beneficial in the interests of the consumers. Hence in the present era of competition the transmission utility having minimum losses has an edge over the competitors due to better profitability & economical rates.

2.1.3 Energy Audit helps in establishing the energy input and quantum consumed by/billed to various categories of consumers, identifying high loss areas, and evolving strategies and action plans for reduction of losses. The technical losses are inherent features of the transmission business such as load losses in transformers, losses in conductors of overhead lines or underground cables, dielectric losses in capacitors, cables etc. These losses cannot be eliminated but can be reduced by devising proper technical specification while procuring transformers, overhead conductors, capacitors, meters etc., devising & adopting strict testing plans while accepting the material, correct installation & regular maintenance.

2.1.4 The objective of the energy audit exercise is to identify the sources of technical losses, quantification of losses, suggest the corrective measures for minimizing technical losses, to work out the cost benefit analysis of corrective measures as suggested for computing the payback period of the investment involved. To achieve this component wise loss data needs to be calculated and subsequent energy analysis done to remedy the problem areas. Technical losses can be reduced through system improvement, e.g., by reducing overloading of lines and transformers, improvement of voltage profile, etc. But these measures require large capital investments.

2.1.5 There are many other reasons why energy auditing activity should be undertaken. Energy auditing will make it possible to compare energy use and cost among the various components of the power supply system and to monitor how energy use changes over time. This information will help those responsible for managing energy costs − maintenance staff, site managers, and others − to get feedback on how well their utility is performing. Energy problems and billing errors could be identified and tackled. By consistently tracking energy use, one can identify problems in the system. A sudden unexplained increase in energy consumption, for instance, would require investigation of the cause.

3 METHODOLOGY

3.1.1 The exercise of energy audit aims to balance the total energy inputs with its outflows in various energy streams. To achieve this, one must have energy meters at all incoming & outgoing energy streams viz. at all the generation injection points and at all the secondary of all the Grid substations.

3.1.2 The basic principle is to identify the Net energy inflow and Net energy outflow at every metering point in the transmission system. Since there is a central transmission grid over which the central power flows the injection losses where not already accounted for need to be incorporated. Although there is a loss in each of the component of power, the major contributors for transmission losses are the I^2R loss in the transmission lines along with the transformer losses at the grid substation.

3.1.3 Power transmission system is a dynamic system wherein the energy parameters are changing at every moment. Hence, in addition to installation of meters at all input & output nodes, the other requirement of establishing energy balance is to get simultaneous readings of all these meters in particular period i.e., at beginning of the period & at the end of the period. This function is better served if the SCADA system is installed to acquire the meter reading data continuously at regular interval or historical data in memory of electronic meters is downloaded using meter reading instrument.

3.1.4 Owing to dynamism of the transmission system, simultaneous meter readings of all meters on incoming and outgoing nodes is the primary requisite for energy audit exercise. At present, the meters of AEGCL are provided at:

(i) Both ends of EHV lines
(ii) Both at HV & LV side of the transformer
(iii) At the point of outgoing lines.

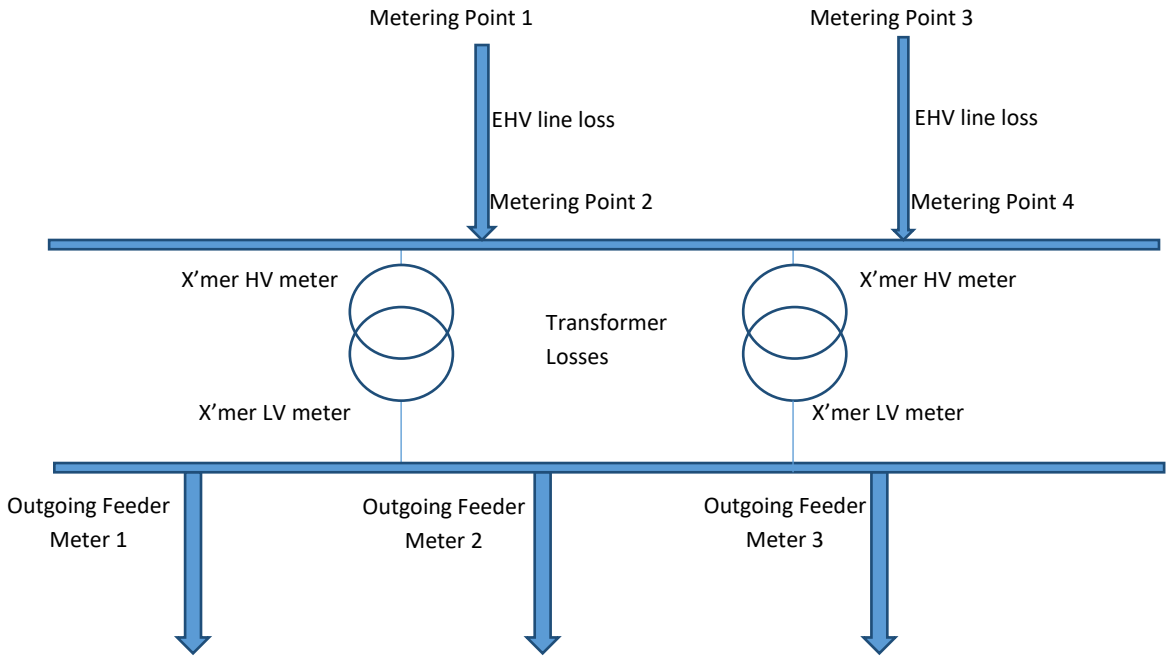

3.1.5 However due to the lack of simultaneous meter readings and several inactive meters at some metering points, component wise accurate energy accounting within the transmission system is not possible. AEGCL is being included in the SAMAST scheme which will provide all interfacing meters as well as Intra-state meter. Implementation of the scheme is being monitored by NERPC. Once the metering facilities are in place, the actual energy drawn & sent out can be monitored & recorded.

3.1.6 Hence presently, the energy lost is calculated by computing the net energy balance of the transmission system which is the energy input into the transmission system (at the state transmission periphery) minus the energy exported to APDCL and open access consumers.

3.1.7 Monthly energy readings recorded are used to calculate the net energy flow through the transmission system

Energy Reading of (X) = (FR – IR) x MC

X = Energy reading for the month

FR = Final meter reading of current month

IR = Initial meter reading of current month

MC = Meter constant

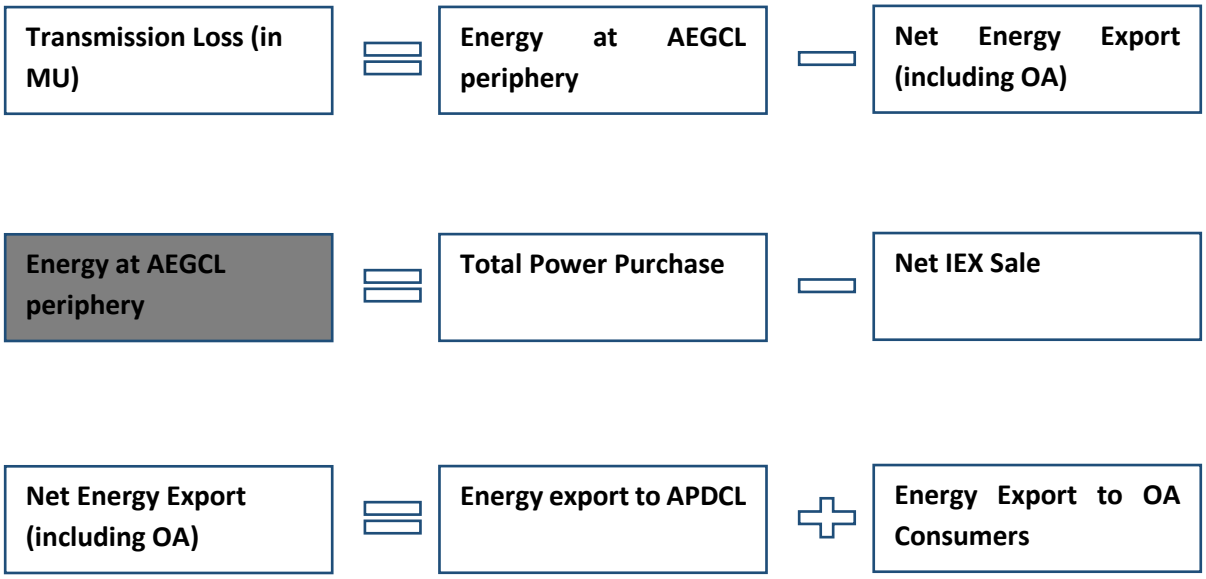

3.1.8 A generic simplified SLD for AEGCL transmission system is given below to understand the energy flow from different voltage levels to export of energy to APDCL and Open Access consumers

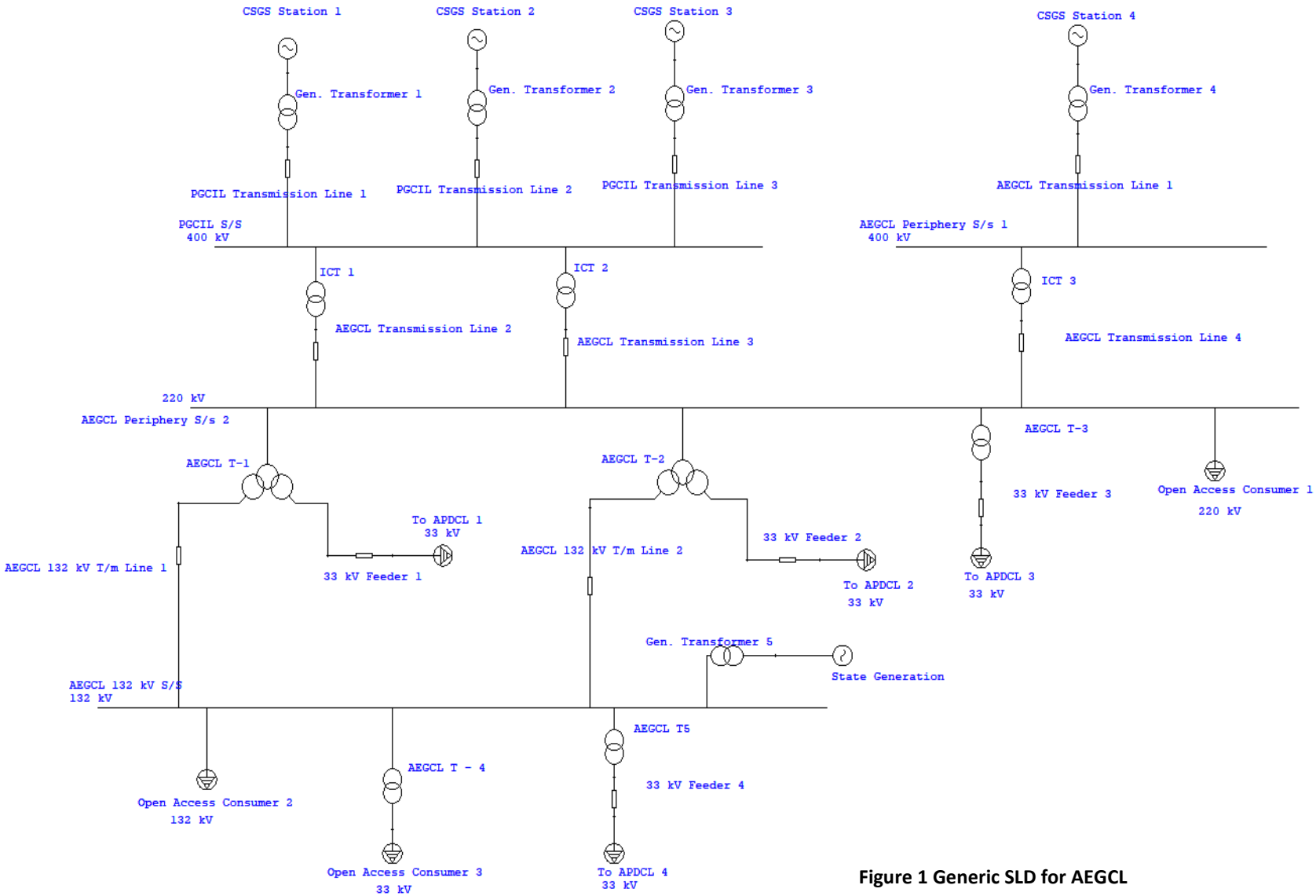

Figure 1 Generic SLD for AEGCL

4 ENERGY AUDIT FOR FY 2022-23

4.1 Transmission loss for FY 2022-23

Table 3: Transmission loss for FY 2022-23

IMPORT DETAILS	ENERGY IN MU												
	APRIL	MAY	JUNE	JULY	AUG	SEPT	OCT	NOV	DEC	JAN	FEB	MAR	TOTAL
FROM CSGS-NER	579.1800	638.0500	621.6261	659.2125	655.8236	656.4510	618.2476	480.8649	509.5794	547.9055	507.6702	490.7831	6965.394
FROM CSGS-ER	126.1961	118.6812	160.9433	158.7639	163.8671	165.2308	126.2535	89.2301	78.1280	72.4249	61.9098	90.1656	1411.794
FROM LTA	20.7993	38.5621	35.6883	34.1270	31.0400	26.1297	14.7481	9.4241	22.2981	27.3254	16.4254	19.1656	295.733
FROM POWER EXCHANGE (IEX)	57.3389	129.5690	121.7556	220.1668	299.2430	209.4444	129.3951	73.5770	72.4505	50.6602	36.2978	95.0282	1494.927
FROM APGCL	141.1474	174.1701	199.1832	212.6240	206.9588	174.1263	200.0933	179.9477	180.7728	171.4089	144.8770	149.6864	2134.996
FROM IPP	11.9590	17.1430	13.5530	19.7920	21.6560	21.2876	21.3429	25.8622	21.6382	22.7070	18.8189	24.4103	240.170
THROUGH DSM	-10.6702	-1.5704	-1.2727	-5.9901	-5.2940	1.8341	-2.1873	7.5981	-19.4606	4.3856	16.3176	11.4135	-4.896
FROM 132 kV BCPL (AT BEHIATING GSS)	0.0059	0.0775	0.0411	0.0470	0.0000	0.0005	0.0026	0.0031	0.0031	0.1379	0.0475	0.0035	0.370
FROM 33 kV BCPL (AT BORDUBI GSS)	0.0037	0.0077	0.0255	0.0183	0.0300	0.0283	0.0208	0.0206	0.0206	0.0164	0.0136	0.0319	0.237
FROM 33 kV KAJOLGAON (AT DHALIGAON GSS)	0.0110	0.0520	0.2590	0.1115	0.0580	0.0745	0.0825	0.0900	0.0900	0.0045	0.0105	0.0023	0.846
TOTAL IMPORT	**925.9712**	**1114.7422**	**1151.8025**	**1298.8729**	**1373.3826**	**1254.6072**	**1107.9991**	**866.6178**	**865.5201**	**896.9763**	**802.3883**	**880.6905**	**12539.571**
(-) SALE THROUGH IEX	152.7655	165.3131	177.2830	58.5050	61.1150	52.0807	108.7728	52.2507	70.4425	83.3012	62.4038	42.8675	1087.101
NET IMPORT	**773.205687**	**949.429127**	**974.5195259**	**1240.36786**	**1312.26761**	**1202.526549**	**999.2262659**	**814.3670791**	**795.0776145**	**813.675108**	**739.9845188**	**837.8229655**	**11452.470**
EXPORT DETAILS													
TO APDCL	742.763	904.499	928.950	1183.719	1253.910	1156.765	961.376	781.669	766.449	785.866	714.024	805.266	10985.257

TO INTER STATE OPEN ACCESS CONSUMERS	6.468	14.206	13.622	13.071	12.953	4.378	5.256	4.782	4.241	0.459	0.951	1.966	82.356
TO INTRA STATE OPEN ACCESS CONSUMERS	0.000	0.000	0.019	0.502	0.581	0.599	0.464	0.714	0.681	0.915	0.714	0.825	6.013
TOTAL EXPORT (B)	**749.232**	**918.705**	**942.592**	**1197.292**	**1267.444**	**1161.742**	**967.096**	**787.165**	**771.371**	**787.240**	**715.689**	**808.058**	**11073.626**
TRANSMISSION AND TRANSFORMATION (T&T) LOSS													
TRANSMISSION AND TRANSFORMATION (T&T) LOSS IN MU =	**23.97**	**30.72**	**31.93**	**43.08**	**44.82**	**40.78**	**32.13**	**27.20**	**23.71**	**26.43**	**24.30**	**29.77**	**378.844**
TRANSMISSION AND TRANSFORMATION (T&T) LOSS IN % =	**3.10%**	**3.24%**	**3.28%**	**3.47%**	**3.42%**	**3.39%**	**3.22%**	**3.34%**	**2.98%**	**3.25%**	**3.28%**	**3.55%**	**3.31%**

4.2 Energy Balance in FY 2022-23

4.2.1 The total energy input at AEGCL periphery is 11073.626 MU out of that, the estimated total energy transmitted is 11452.470 MU (energy sent out to APDCL periphery is 10985.257 MU and energy sent out to Open Access consumers is 88.369 MU) leaving behind the transmission losses of 361.55 MU with transmission loss of 3.31 %.

Table 4: Transmission Loss of AEGCL in FY 2022-23

Particulars	MU
Energy Injected	**11452.470**
Energy Injected by APGCL	2134.996
Energy Injected by CSGS (ER & NER)	8377.188
Energy Injected by LTA	295.733
Energy Injected by Power Exchange	1494.927
Energy Injected by IPPs	240.170
Energy Injected by CPPs	1.453
Energy Injected through DSM	-4.896
Energy Sale through Power Exchanges (-)	1087.101
Total Energy sent out	**11073.626**
Energy sent out to APDCL	10985.257
Energy sent out to Inter state OA customers	82.356
Energy sent out to Intra state OA customers	6.013
Transmission loss (MU)	**378.884**
Transmission loss (%)	**3.31**

4.3 Monthly Energy Balance of AEGCL in FY 2022-23

4.3.1 The monthly energy balance in respect of energy received at state periphery is established in the chart below:

Table 5: Monthly Energy Balance of AEGCL in FY 2022-23

FY 2022-2023	Total Power Injection to AEGCL Grid (MU)	Total Power Transmitted to Distribution Including Open Access (MU)	Total Transmission Loss (MU)	Total Transmission Loss in AEGCL Grid %
Apr-22	773.205687	749.232	23.97	3.10%
May-22	949.4291272	918.705	30.72	3.24%
Jun-22	974.5195259	942.592	31.93	3.28%
Jul-22	1240.367861	1197.292	43.08	3.47%

FY 2022-2023	Total Power Injection to AEGCL Grid (MU)	Total Power Transmitted to Distribution Including Open Access (MU)	Total Transmission Loss (MU)	Total Transmission Loss in AEGCL Grid %
Aug-22	1312.267613	1267.444	44.82	3.42%
Sep-22	1202.526549	1161.742	40.78	3.39%
Oct-22	999.2262659	967.096	32.13	3.22%
Nov-22	814.3670791	787.165	27.20	3.34%
Dec-22	795.0776145	771.371	23.71	2.98%
Jan-23	813.675108	787.240	26.43	3.25%
Feb-23	739.9845188	715.689	24.30	3.28%
Mar-23	837.8229655	808.058	29.77	3.55%
Total	**11452.470**	**11073.626**	**378.884**	**3.31%**

Figure 2 Transmission Loss of AEGCL in FY 2022-23

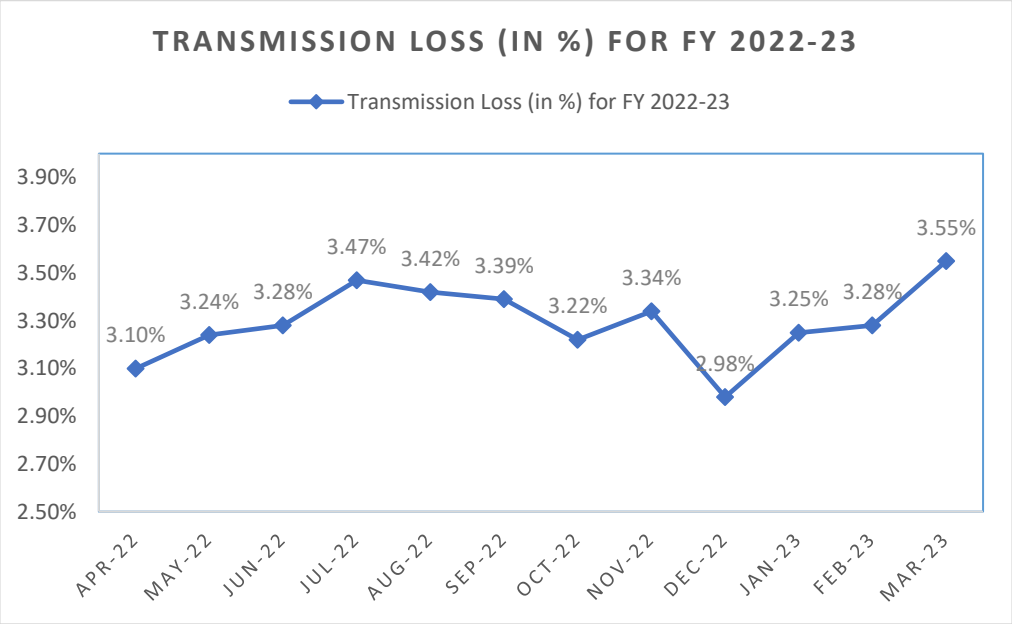

4.3.2 The transmission loss of AEGCL has substantially came down from 3.32% in FY 2021-22 to 3.31% in FY 2022-23. The improvement in Bus Voltage & reduction in Transmission Loss from the year FY 2021-22 to FY 2022-23 was observed due to the following facts.

i) The commissioning of Tangla GSS, Sarupathar GSS, Tezpur GSS under NERPSIP scheme, resulted in the improvement in 33kV downstream Distribution voltage substantially at all APDCL substations. Consequently, the Transmission Loss has reduced at such areas.

ii) With the commissioning of Barpeta GSS there has been substantial improvement in voltage at the downstream distribution substation. Moreover, some load in the 132kV Barngar GSS has been released. Improvement in the voltage in the Barnagar area was also observed. Therefore, the Transmission Loss came down at these areas.

5 ENERGY AUDIT FOR FY 2023-24

5.1 Transmission loss for FY 2023-24

Table 6: Transmission Loss for FY 2023-24

IMPORT DETAILS	ENERGY IN MU						
	APRIL	MAY	JUNE	JULY	AUG	SEPT	TOTAL
FROM CSGS-NER	556.24	556.99	575.69	666.26	720.62	663.33	3739.13
FROM CSGS-ER	97.46	108.74	156.94	175.93	171.35	153.01	863.43
FROM LTA	20.06	28.67	34.01	40.04	39.60	33.11	195.48
FROM POWER EXCHANGE (IEX)	103.32	176.43	269.99	249.78	172.56	222.39	1194.47
THROUGH DSM	1.89	7.84	11.13	13.90	37.11	60.30	132.16
TOTAL	**778.97**	**878.67**	**1047.75**	**1145.91**	**1141.24**	**1132.14**	**6124.67**
(-) SALE THROUGH IEX	70.68	44.41	106.07	40.76	55.70	7.29	324.92
TOTAL INTER STATE IMPORT	**708.29**	**834.26**	**941.67**	**1105.14**	**1085.54**	**1124.84**	**5799.75**
FROM APGCL	168.19	157.95	168.14	180.20	198.67	177.69	1050.85
FROM IPP	27.19	29.99	22.99	26.00	24.16	28.65	158.98
FROM DALMIA CEMENT- SOLAR & WHRS GENERATION	0.83	0.71	0.86	0.94	0.63	0.76	4.73
FROM 132 kV BCPL (AT BEHIATING GSS)	0.00	0.03	0.05	0.01	0.01	0.00	0.11
FROM 33 kV BCPL (AT BORDUBI GSS)	0.02	0.03	0.02	0.02	0.03	0.01	0.13
FROM 33 kV KAJOLGAON (AT DHALIGAON GSS)	0.05	0.01	0.00	0.00	0.07	0.06	0.19
TOTAL IMPORT	**904.56**	**1022.98**	**1133.74**	**1312.31**	**1309.11**	**1332.03**	**7014.73**
EXPORT DETAILS							
TO APDCL	873.63	987.38	1093.45	1262.78	1263.92	1285.34	6766.50
TO INTER STATE OPEN ACCESS CONSUMERS	1.21	1.72	1.88	4.42	1.64	2.40	13.26
TO INTRA STATE OPEN ACCESS CONSUMERS	0.78	0.63	0.77	0.90	0.61	0.86	4.55
TOTAL EXPORT (B)	**875.62**	**989.73**	**1096.10**	**1268.09**	**1266.17**	**1288.60**	**6784.31**

TRANSMISSION AND TRANSFORMATION (T&T) LOSS IN MU=	**28.95**	**33.25**	**37.64**	**44.23**	**42.94**	**43.42**	**230.42**
TRANSMISSION AND TRANSFORMATION (T&T) LOSS IN % =	**3.20%**	**3.25%**	**3.32%**	**3.37%**	**3.28%**	**3.26%**	**3.28%**

5.2 Energy Balance in FY 2023-24

5.2.1 The energy injected and transmitted at transmission at transmission grid in FY 2023-24 is based on 6 (six) months actual and 6 (six) months projection. Projection has been computed based on historical information. The total energy input at AEGCL periphery is 13043.92MU out of that, the estimated total energy transmitted is 12615.75MU (energy sent out to APDCL periphery is 12577.42MU and energy sent out to Open Access consumers is 38.33MU) leaving behind the transmission losses of 428.17MU with transmission loss of 3.38%

Table 7: Transmission Loss of AEGCL in FY 2022-23

Sl. No.	Particulars	FY 2023-24		
		H1 (Actual)	H2 (Estimated)	Total (Estimated)
1	**Energy Injected (MU)**	**7014.73**	**6029.19**	**13043.92**
2	Energy sent out to APDCL (MU)	6766.50	5810.92	12577.42
3	Energy sent out to Inter State Open Access Consumers (in MU)	13.26	14.20	27.46
4	Energy sent out to Intra State Open Access Consumers (in MU)	4.55	6.32	10.87
5	**Total Energy Sent out (MU)**	**6784.31**	**5831.44**	**12615.75**
6	Transmission Loss (MU)	230.42	197.75	428.17
7	**Transmission Loss (%)**	**3.28%**	**3.28%**	**3.28%**

6 ANALYSIS AND CONCLUSION

6.1 Analysis

6.1.1 Since the component wise metering data is not available in real time, hence an effective energy auditing exercise cannot be conducted. In the absence of the same, the total energy inflow and outflow through the transmission network with transmission loss calculated on the same basis.

6.1.2 The actual transmission loss for AEGCL for FY 2022-23 and provisional transmission loss for FY 2023-24 comes out to be 3.28%.

6.2 Transmission Loss Scenario

6.2.1 The transmission loss percentage has substantially come down from 3.31% (FY 2022-23) to estimated 3.28% in FY 2023-24. This signifies a loss reduction of 0.03% against the Hon'ble Commission's stipulation of 0.02% such an encouraging decrease in % Transformer loss become possible due to the following facts

i) With the commissioning of 132kV Hatsingmari GSS on 27.05.2023 there has been substantial improvement in voltage at the downstream distribution substation

ii) The commissioning of 132kV LILO from Pare-Nirjuli line at Nalkata GSS has increased the voltage profile at Nalkata 132kV Bus voltage profile at Nalkata 132kV Dhemaji &132kV Silapathar Bus. As a result of this 33kV downstream Distribution voltage has improved substantially at all DISCOM substations. Consequently, the Transmission Loss has come down at these areas.

iii) Many of the old 25MVA Transformers have been replaced at various Substations namely, Depota, Barnagar, Dibrugarh, Samaguri, Mirza, Moran Khaloigaon etc. Capacity Augmentation was carried out at 220kV Agia GSS by addition of 160MVA Transformer. List of New Grid Element added to Assam Grid is enclosed herewith as Annexure- A.

iv) Some of the old Transmission lines such as 132kV Gauripur-Gosaigaon line, 132kV Salakati-Dhaligaon line and 220kV Sarusajai-Kukurmara line have been replaced with HTLS Conductors.

v) In the coming months, AEGCL expected to commission and load at 220kV Amingaon GSS, 132kV Nathkuchi GSS, 132kV Hajo GSS, 132kV Paltanbazar GIS and GMC GIS.

6.2.2 Hence, further improvement in Bus Voltage & accompanying reduction in Transmission Loss is expected. AEGCL expected to comply with the stipulated Transmission Loss trajectory in the coming years.

6.3 SAMAST

6.3.1 SAMAST (Scheduling, Accounting, metering and Settlement of Transactions in Electricity) scheme is a GoI project which aims to implement a robust, scalable and transparent framework of

scheduling, metering, accounting and settlement of energy transactions at intra-state as well as interstate level in India.

6.3.2 The project scope shall consist of the following:

a) Supply and installation of the ABT Meters with TTB mounted in the meter box, Laying and termination of control cables at primary Equipment and Meter Box.
b) Supply and installation of DCU (Data Concentrator Units) mounted in the suitable mounting panel completely wired.
c) Supply and installation of Communication hardware such as modems, communication front end servers, routers etc. for implementation of Wireless and Leased Network access to service Provider Networks.
d) Supply and installation of IT Infrastructure consisting of database Servers, Application Servers, Web servers, SAN Storage System, Workstations, printers, LAN with accessories, communication cables etc.
e) Supply and installation of the system software i.e., operating systems and Application Software consisting of RDBMS, Web Service, Unified Threat Management System, and functional software for meeting the functional requirement of the specification.
f) The entity creations in the application software module, migration of existing data required to fully operationalize the system.
g) Communication system i.e., wireless and Leased Networks from the Service Providers. The connections shall be taken during project implementation, warranty/guarantee and maintenance period.
h) Handholding and training of the personnel during the standard warranty/guarantee period of 1 year after go-live of the project.
i) The maintenance of the complete system after completion of standard warranty/guarantee period including periodic and breakdown maintenance, providing and configuration of software up-grade/patches for applications software, addition of new locations/meters during this period, manpower assistance for the co-ordination of maintenance work and generation of reports at Data/control centre at Guwahati.
j) As the meters would be of 0.2 class accuracy, commensurate CT/PT would be desirable to have correct reading from the Meters. In some of the locations, CT/PT are of much inferior class and need to be replaced. Requirement of CT/PT has also been worked out accordingly.
k) As per recommendation of FOR Technical Committee meeting held at Shillong on 16.4.2018, the ABT meter requirement was scrutinized by the SAMAST group and asked to reduce the meter requirement by excluding all 33 KV feeders & all ISTS lines in this project.

6.4 Progress Reports of SAMAST

S.N.	Item	Responsibility	Description of work	Status	Remarks
1	**DATA CENTRE HARDWARE**	**Infotek Services, Kolkata**	• Installation work of the Data Centre Hardware items. (i.e., Database server, Virtualization server, CDCS server, SAN, NAS, Firewall and UPS system & Battery bank has already been installed at SLDC Data Centre) has been completed on 21th February 22.	**100%**	Completed, Defect liabilities starts from 1st July 2023.
2	**DATA CENTRE SOFTWARE**	**Infotek Services, Kolkata**	• Activation of Replication software, back up & Recovery software, Virtualization Software (VM ware), Windows server Operating system, User Client access license (CAL), Manage Engine OP manager professional Edition, Manage Engine Patch Manager, Installation of Operating software and MDAS application at CDCS server is completed.	**100%**	-
3	**Associated IT services**	**SLDC**	• High Speed internet connection has been procured from M/s Power-tel Ltd. • Installation completed for MPLS connectivity in GPRS network for secured metered data collection from Substations to Data center. • LAN connectivity for workstation for SAMAST has been completed. • Procured Domain name, SSL certificate, SMS gateway, Mail service etc. for hosting SLDC website. • Firewall for Power-tel lease line has been procured & installed as per cyber security guidelines.	**100%**	-

4	**SOFTWARE MODULE DEVELOPMENT**	**PwC, Kolkata**	• PwC, Kolkata has completed the Software development activities on Scheduling, Open Access, CMS website & MDM module and FAT is approved by AEGCL for these modules. Development activities for the E-Log-book module, Energy accounting and MIS module are going on.	**100%**	Completed, Defect liabilities starts from 1st July 2023.
5	**Mass Installation of ABT energy meter with AMR at 220kV, 132kV level**	**Genus Infrastructure Pvt Ltd.**	• Completed in the AEGCL Grid Substations.	**99%**	8 Nos of IEM to be installed at NTPC & NRPP.
6	**Cyber security**	**PwC & Genus**	• Installation of Firewall by M/s PwC for the IT part is completed. • Installation of firewall by M/s Genus for the communication server at data center is completed. • Installation & commissioning of Firewall with Unified Threat Protection (UTP), Advance Malware protection, Application control, Web & video filtering, Antispam service etc. for internet lease line (Power Tel) is completed on 02.09.2022	**100%**	Firewall and antivirus activated till date. VAPT done.
7	**Mass Installation of ABT energy meter with AMR at 33kV voltage level**	**Secure Meter Ltd.**	• Mass installation of meters at 33kV voltage level is Completed in the AEGCL Grid Substations	**100%**	Completed, Defect liabilities starts from 31st Aug 2023.

6.5 Analysis of Transmission Losses

6.5.1 Like all other power systems, no matter how carefully the system is designed, losses are present and must be modeled before an accurate representation of the system response can be calculated. Although various types of losses are present in transmission line, the major losses can

be attributed to Transmission line losses and Transformer losses.

6.6 Line losses

6.6.1 The primary source of losses incurred in a transmission system is in the resistance of the conductors. For a certain section of a line, the power dissipated in the form of useless heat as the current attempts to overcome the ohmic resistance of the line and is directly proportional to the square of the rms current traveling through the line.

6.6.2 The resistance in turn is proportional to length of conductor & resistivity & inversely proportional to cross section of conductor. Also, the current in transmission line is inversely proportional to transmission voltage. a small decrease in voltage can result in a significantly high increase in loss.

6.7 Transformer Losses

6.7.1 Transformer losses can be categorized as:

- Copper losses: Copper loss or I^2R loss occurs because of heat dissipation due to current passing through the windings of the transformer and the internal resistance offered by the windings. The copper loss is variable loss and depend upon the variation in the current due to change in load.
- Iron Losses: Iron loss occurs in the core of the transformer and depends upon the magnetic properties of the core material. Iron loss is constant as it does not change with the load. The technical loss in transformers, both copper and iron loss, is calculated based on the number of hours the said transformer were in service, peak load, power factor, number, and capacity of the transformer.

Total iron loss (kWh) =I x N x t/1000

Total copper loss (kWh) = C x N x $(DTL)^2$ x LLF x t/1000

Here,

I = Rated Iron loss of the transformer

C= Rated Copper loss of the transformer

N = Number of transformers connected to the feeder

DTL= Loading on the transformer calculated as: Peak load (MVA)/Total connected load (MVA)

t= Number of hours the transformer was working in the year

LLF = Loss load factor

6.8 Potential Methods of reducing Transmission loss

a) Reconductoring of Transmission line

The old conductors and jumpers of transmission lines in Assam needs to be replaced wherever necessary. AAAC, HTLS conductor has better corrosion resistance & better strength to weight ratio and are being used at many of the transmission projects in AEGCL.

b) Conversion of single circuit feeders to Double circuit feeders

Existing single circuit needs to be converted into double circuit. The feasibility study shall be carried out considering the tower design, right of way, clearances, sag etc. Moreover, the suitability of tower height for requisite clearances, sag, arm length, wind pressure, span, right of way as well as capital expenditure & its viability needs to be checked in detail.

c) Improvement of Power factor

The transmission lines have to wheel active as well as reactive power. The reactive current causes additional losses in transmission lines & transformers. Due to drawl of reactive power causes decrease in the power factor. The power factor in case of all transformers in substations is found to be in range of 0.94 to 0.98.

Due to low power factor the transmission system has to carry the load of reactive power. If the reactive power is compensated locally at sub stations by installing capacitors of requisite ratings, the upstream network will be relieved by reactive current.

The improvement in power factor would also result in reduction in instantaneous demand relieving the load on upstream transmission grid as well as generating system causing surplus energy out of predefined allocation. The reduction in demand will result in reduction in demand charges.

d) Replacing **old equipment**: One way to reduce losses is to replace older equipment. In very high usage regions of the network, installing replacement cables with a higher power rating can greatly reduce losses. When replacing power cables, a careful load analysis to anticipate load on the cable is necessary to determine which cable is most efficient.

e) Right-**sizing Transformers**: Transformers operate most efficiently when they are at 80-100% of maximum capacity. Underloaded transformers are inefficient due to core losses. If some transformers are frequently underloaded, it may be possible to strategically shut down certain transformers or install smaller transformers appropriate for the load. If transformers are frequently overloaded, it might be safer and more efficient to install larger transformers or rebalance the load such that the transformers are under capacity.

f) **Using capacitor banks to decrease the reactive load drawl from GSS:** The two components of apparent load on a system are real load, which performs work, and reactive load, which is needed to magnetize an object such as a transformer core. By installing or adjusting capacitor banks, the percentage of reactive load on the system can be decreased, reducing losses of real power.

g) **Voltage optimization**: By carefully re-adjusting voltage levels in a network, it may be possible to reduce the current flow in parts of the network, decreasing the total resistive loss in the system.

6.8.1 Identifying the causes of loss on a network and determining the best method for reducing loss can be challenging, but recent advances in smart meter infrastructure and machine learning can help substantially. The increased temporal and spatial data resolution provided by smart grid technology can be used to better understand loss, sources of loss, and the evolution of loss over time. Once a detailed map of system losses is determined, a cost-effective method for reducing losses is much easier to develop.

Annexure – IV
Fund Utilisation under Colony Maintenance for FY 2022-23

AERC Colony Maintenance for the FY 2022-23 (CAR)								
Sl. No.	Name of the work	AA	FC Amount	Status of work	Bill Amount & Fund release year			Remarks
					2022-23	2023-24	2024-25	
2022-23								
1	Renovation of existing damaged quarter to convert into officers hostel at 132kv Dullavcherra GSS (Unit-I)		₹ 7,77,026	Work Completed		₹ 7,75,453		Fund released on 20.05.23
2	Renovation of existing damaged quarter to convert into officers hostel at 132kv Dullavcherra GSS (Unit-II)		₹ 7,77,026	Work Completed		₹ 7,75,453		Fund released on 20.05.23
3	Installation of deep tube well for officers hostel at Dullavcherra GSS		₹ 1,76,174					
5	Renovation and repairing of 3 nos of Type-VI quarter at Samaguri GSS		₹ 10,84,146	Work Completed	₹ 10,71,081			Fund released on 29.12.22
6	Renovation and repairing of 1 nos of Type-IV quarter at Samaguri GSS		₹ 4,74,820	Work Completed	₹ 4,74,564			Fund released on 09.01.23
7	Renovation and repairing of 4 nos of Type-v quarter at Samaguri GSS		₹ 17,02,942	Work Completed	₹ 16,99,217			Fund released on 23.02.23
8	Construction of 11kv spur line & installation of 11/0.43kv, 63kvadistribution transformer for providing power supply to residential colony at 132/33kv Karimganj GSS		₹ 15,45,989	Work Completed	₹ 15,45,989			Fund released on 27.10.22
10	Repairing cum modification of existing quarter to be converted into Officer's Hostel at 220kv Samaguri GSS campus		₹ 6,53,682	Work Completed	₹ 6,53,538			Fund released on 31.03.23
11	Repairing cum modification of existing quarter to be converted into Staff's Hostel at 220kv Samaguri GSS campus		₹ 10,43,773	Work Completed	₹ 10,43,519			Fund released on 31.03.23
14	Construction of one number of security booth near main gate at 132kv Dhekiajuli GSS		₹ 2,18,790	Work Completed		₹ 2,18,790		Fund released on 12.07.23
15	Repairing of Bituminous Macadam Road from main gate to switchyard at 220kv GSS,AEGCL,Samaguri		₹ 11,92,030	Work Completed	₹ 11,92,030			Fund released on 31.03.23
16	Construction of new main entrance gate and renovation of security booth at 220kv Samaguri GSS		₹ 5,62,129	Work Completed		₹ 5,62,129		Fund released on 08.09.23
17	Repairing of Type-VI Quarter no 12 at 132kv Haflong GSS		₹ 68,319	Work Completed		₹ 68,319		Fund released on 17.10.23
18	Construction of a new main gate at the entrance of Officer's colony, repairing of existing Bituminous Macadam Road from main gate of officer's colony to IB gate and constructing a new CC (Cement Concrete) approach road from IB gate to IB at 132kv Depota GSS,AEGCL		₹ 4,76,678	Work Completed		₹ 3,36,080		Fund released on 25.09.23
19	Repairing of existing C/C pavement from control room building along the switchyard fencing at 132kv Umrangshy GSS,AEGCL		₹ 80,757	Work Completed		₹ 80,757		Fund released on 09.05.23
20	Construction of 2 nos of Septic Tank for 4 units of quarter and minor sanitary installation along with water supply connection to the existing RCC tank adjacent to the quarter at 132/33kv GSS, Panchgram	₹ 2,59,491						
		₹ 2,59,491	₹ 1,08,34,281		₹ 76,79,938	₹ 28,16,981		

FUND RELEASED IN FY 2022-23						
Sl. No.	Work Details	AA amount	FC amount	Bill Amount	Release Date	Remarks
2	Repairing of Type -03(N) quarter no-02 at kahilipara AEGCL Colony	68,580.00	68,580.00	68446	24-11-2022	Payment released
3	Repairing and renovation of RCC Type -V/01 at AEGCL Kahilipara Colony	1,63,427.00	1,63,427.00	162750	30-11-2022	Payment released
4	Repairing of Type-IV/GF-2 Unit of RCC Building at Sarusajai AEGCL, Colony	2,09,588.00	2,08,457.00	207730	30-11-2022	Payment released
5	Repairing and renovation of Type-III RCC (1) Building Quarter No- GF-01 including Head Room roof treatment at sarusajai AEGCL Colony	3,49,331.00	3,47,793.00	344694	30-11-2022	Payment released
6	Repairing and renovation of LP school to convert it to security Barrack at AEGCL Kahilipara colony	6,62,530.00	6,62,530.00	659482	06-12-2022	Payment released
7	Repairing and renovation of Type-III RCC (1) Building Quarter No- FF-2 including roof water proofing treatment at sarusajai AEGCL Colony	2,53,115.00	2,52,465.00	251867	06-12-2022	Payment released
8	Repairing and renovation of Type III RCC (1) Building Quarter No-GF-2 at sarusajai AEGCL Colony	3,32,278.00	3,29,805.00	329750	06-12-2022	Payment released
9	Water proofing of Type-III/08 at Kahilipara, AEGCL, Colony.	93,132.00	93,132.00	93132	16-12-2022	Payment released
12	Repairing of Type -03(N) quarter no-01 at kahilipara AEGCL Colony	1,16,694.00	1,16,694.00	116364	05-01-2023	Payment released
13	Repairing and renovation of Type-IV RCC (2) Building Quarter No-FF-3 at sarusajai AEGCL Colony	2,00,831.00	2,00,645.00	200330	05-01-2023	Payment released
14	Repairing of RCC Type-V quarter at 132/33 kV Baghjap GSS(including sanitary work)	3,26,512.00	3,26,349.00	326349	05-01-2023	Payment released
15	Repairing and renovation of Type -IV/12 at Kahilipara AEGCL Colony	2,95,313.00	2,95,313.00	276108	09-01-2023	Payment released
16	Repairing and renovation of RCC Type-V quarter no9 to convert it to staff guest house at Kahilipara colony	2,34,067.00	2,34,067.00	231949	09-01-2023	Payment released
17	Repairing and renovation of RCC Type -III/01 at AEGCL Kahilipara Colony	1,06,353.00	1,06,353.00	106342	09-01-2023	Payment released
18	Repairing and Renovation of Type –V quarter no-12 quarter at Kahilipara AEGCL, Colony.	3,57,178.00	3,57,178.00	356077	09-01-2023	Payment released
19	Lifting of column pipe and replacement of 5HP submersible pump deep tube well no.2 & 4 at AEGCL, Kahilipara Colony	2,03,991.00	2,03,991.00	203991	09-01-2023	Payment released
21	Construction of new wall inside Dwaranda Store	4,06,373.00	4,03,082.00	291707	21-01-2023	Payment released
22	Repairing of Type -03(N) quarter no-04 at kahilipara AEGCL Colony	2,59,096.00	2,59,096.00	258767	04-03-2023	Payment released
23	Repairing and Renovation of Type –V unit-10 quarter at Kahilipara AEGCL, Colony.	58,050.00	58,050.00	58050	04-03-2023	Payment released
24	Repairing and renovation of Type-IV RCC (1) Building Quarter No-GF-1 at sarusajai AEGCL Colony	1,86,277.00	1,85,377.00	184988	04-03-2023	Payment released
25	Repairing and renovation of Type-IV RCC (2) Building Quarter No-FF-2 at sarusajai AEGCL Colony	2,11,121.00	2,09,312.00	209186	04-03-2023	Payment released
26	Additional works for RCC slow sand water filter for colony including repairing and renovation of existing pump house at 220 kV Sarusajai.	1,81,414.00	1,79,039.00	178216	04-03-2023	Payment released
27	Repairing and renovation of security Booth including running water system at 220KV EHV Sarusajai GSS	2,28,170.00	2,25,448.00	224693	04-03-2023	Payment released
28	Repairing and renovation of Type -IV No-7 at Kahilipara AEGCL Colony	3,46,097.00	3,46,097.00	335360	30-03-2023	Payment released
29	Repairing of Assam type-II/01 (RE quarter) at Kahilipara AEGCL Colony	4,00,856.00	4,00,856.00	400856	30-03-2023	Payment released
30	Repairing and renovation of RCC type-IV/01 at Kahilipara AEGCL Colony	3,51,444.00	3,51,444.00	351444	30-03-2023	Payment released
31	Providing GI pipelines in the main PWD road, changing the filter media of filter complex and minor sanitary fittings at AEGCL, Kahilipara Colony.	3,31,447.00	3,31,447.00	331447	30-03-2023	Payment released
32	Repairing of Departmental quarter, No- NT-III/1, at AEGCL Campus of 132KV Dhaligaon GSS	53,387.00	53301	53280	31-03-2023	Payment released
33	Proposal for Repairing and Renovation of Type-V/21 quarters at Kahilipara, AEGCL, Colony	1,10,904.00	110314	110109	31-03-2023	Payment released
34	Extension and Renovation of the existing washroom of the control room building for provision of a separate ladies toilet at 132KV Dhaligaon GSS, AEGCL	2,97,715.00	3,27,218.00	326392	31-03-2023	Payment released
				₹ 72,49,856.00		

Utilization of Colony Maintenance fund of AERC for the FY 2022-23 under O&M, UAR

Fund Release in FY 2022-23

Sl. No	Work Description	Amount(₹)	Bill Amount(₹)	Payment Release Date	Remarks
5	Repairing and renovation of Type III quarter (Room 1 & 4) at 220KV GSS, AEGCL, Tinsukia	4,13,316.00	4,07,705	24-12-2022	
6	Repairing of common toilet of office at the office of the AGM, Nazira Division, AEGCL, Gargaon	1,55,368.00	1,51,597	06-01-2023	
10	Repairing and renovation of Type D quarter(2 Nos.) at 220 KV GSS Tinsukia	3,78,018.00	3,20,548	06-02-2023	
11	Repairing and renovation of RE quarter at 220KV GSS, AEGCL, Tinsukia	4,20,278.00	4,06,343	06-02-2023	
12	Repairing of RE quarter at 132kV GSS, Betbari, AEGCL	1,41,924.00	1,37,998	07-02-2023	
13	Construction of security booth at 132kV GSS, AEGCL, Jorhat West	2,24,288.00	2,22,210	07-02-2023	
16	Repairing and renovation of Type IV quarter(1 No.) at 220 KV GSS Tinsukia	3,12,403.00	3,05,376	02-03-2023	
17	Repairing of officers hostel at Moran GSS	11,90,880.00	11,90,880	02-03-2023	
19	Renovation of type-IV quarter at 220kV Colony, AEGCL, Mariani, Qtr-4	1,67,086.00	1,63,233	14-03-2023	
20	Renovation of type-III quarter at 220kV Colony, AEGCL, Mariani, Qtr-2	1,58,156.00	1,56,878	14-03-2023	
21	Repairing/renovation of staff Hostel at 132kv GSS,AEGCL,Bokakhat	3,04,269.00	3,04,269	14-03-2023	
22	Repairing/renovation of Officer's Hostel at 132kv GSS,AEGCL, Bokakhat	3,80,395.00	3,80,395	14-03-2023	
25	Repairing and renovation of Type V quarter(2 Nos.) at 220 KV GSS Tinsukia	3,83,193.00	3,69,982	29-03-2023	
26	Repairing and maintenance of departmental qtr Type C, Qtr no 1 of the residential colony of 132kv Dibrugarh GSS,AEGCL	3,57,615.00	3,47,582	29-03-2023	
27	Repairing and maintenance of departmental qtr Type C, Qtr no 2 of the residential colony of 132kv Dibrugarh GSS,AEGCL	1,81,947.00	1,81,947	29-03-2023	
28	Repairing and maintenance of departmental qtr Type D, Qtr no 12 of the residential colony of 132kv Dibrugarh GSS,AEGCL	1,35,748.00	1,35,748	29-03-2023	
29	Repairing and renovation of Type-IV(a) quarters(2 nos) at 132kv GSS, AEGCL, Ledo	4,31,741.00	4,29,341	29-03-2023	
30	Repairing and renovation of Type-IV(b) quarters(2 nos) at 132kv GSS, AEGCL, Ledo	4,26,762.00	4,23,664	29-03-2023	
32	Repairing and maintenance of departmental qtr Type D, Qtr no 18 of the residential colony of 132kv Dibrugarh GSS,AEGCL	1,30,354.00	1,30,354	30-03-2023	
		Total Fund Release in FY 2022-23	**6166049.73**		

Colony Maintenance Fund released in FY 2022-23

Region	Amount
Central Assam Region	₹ 76,79,938.00
Lower Assam Region	₹ 72,49,856.00
Upper Assam Region	₹ 61,66,049.73
Total Amount	**₹ 2,10,95,843.73**

Annexure – V
Revised Capital Investment Plan of AEGCL for FY 2022-23 to FY 2024-25

ANNEXURE V – REVISED CAPITAL INVESTMENT PLAN OF AEGCL FOR FY 2022-23 TO FY 2024-25

The scheme wise projects are detailed with capital expenditure, capitalisation, mode of funding and elaborating the requirement of project. The summary of scheme wise investments and its capitalisation is summarised below:

Scheme Wise Capital Expenditure from FY 2022-23 TO FY 2024-25

(Rs. Crore)

Scheme Name	FY 2022-23 Actual	FY 2023-24 Estimated	FY 2024-25 Projected
AIIB	156.19	418.05	855.11
ADB	4.68	3.32	0.00
NERPSIP	0.00	0.00	0.00
Annual Plan/SOPD	1.48	5.22	9.35
PSDF	16.01	17.15	-
TDF	1.86	16.83	4.16
Deposit work	0.00	0.00	0.00
NEC	0.00	0.00	0.00
NESIDS	-	5.00	25.00
AIFA	9.31	19.58	2.83
AIIMS	0.00	6.94	5.00
Internal Accrual Equity	2.87	5.13	0.00
PM Gati Sakti	-	2.00	-
TOTAL	**192.40**	**499.21**	**901.45**

Scheme Wise Capitalisation from FY 2022-23 TO FY 2024-25

(Rs. Crore)

Scheme Name	FY 2022-23 Actual	FY 2023-24 Estimated	FY 2024-25 Projected
AIIB	97.65	48.70	122.75
ADB	53.24	33.53	0.00
NERPSIP	0.00	689.76	0.00
Annual Plan/SOPD	8.51	16.23	28.11
PSDF	21.46	19.48	-
TDF	34.14	103.70	30.85
Deposit Works	38.72	38.78	57.72
NEC	0.02	0.00	0.00
NESIDS	-	-	1.32
AIIFA	0.00	46.43	22.41
AIIMS	22.52	3.94	8.00
Internal Accrual Equity	13.61	9.07	-
PM Gati Sakti	-	-	2.00
TOTAL	**289.87**	**1009.62**	**273.15**

Table of Contents

1. **Asian Infrastructure Investment Bank (AIIB) Scheme** 3
2. **Asian Development Bank (ADB)** 19
3. **Power System Development Fund (PSDF)** 22
4. **Trade Development Fund (TDF)** 24
5. **NERPSIP** 27
6. **Assam Infrastructure Financing Authority (AIFA)** 29
7. **AIIMS** 31
8. **Annual Plan/SOPD-G** 32
9. **Deposit Works** 39
10. **North Eastern Special Infrastructure Development Scheme (NESIDS)** 44
11. **North Eastern Council (NEC)** 46
12. **Internal Accrual Equity** 47
13. **PM Gati Sakti Scheme** 53

1. Asian Infrastructure Investment Bank (AIIB) Scheme

The Government of India has already planned to make power available for all for 24x7. To meet such demands, the following works are proposed by AEGCL to be executed under **Assam Intra State Transmission System Enhancement Project** with financial assistance from AIIB.

The entire project was split in two phases and the First Phase of the Project has been finalized with the scope of work based on the present availability of land for execution of the Project as per discussion with AIIB.

Present Status of Works:

Sl No	Description of work	Name of the TKC/Supplier	Date of Award	Scheduled date of completion	Status as on 30.10.2023
1	Construction of 220/33kV, 2X100 MVA GIS at two locations (Bihpuria & Jakhalabandha) and associated Transmission Lines (Package A)	M/s NECCON Power & Infra Limited	26.07.2021	22.12.2024	**Jakhalabandha** 1. Civil and Electrical Design and Drawings review and approval process is going on. 2. Check Survey of associated transmission line approved. 3. Tower design submitted to IITG for vetting. 4.Boundary wall: 91% overall completed. 5. Earth filling: 44% overall completed. 6. RE residence: 52% overall completed. 7. Store Building: 55% overall completed. 8. Transformer 1 and 2 pad: 57% completed. 9. 33/11 KV switchgear and CRB: 32% overall completed. 10. Officers Hostel cum Transit camp: 30% overall completed. 11. Open Store Shed: 90% overall completed. 12. 220 KV GIS Building along with GIS bay foundation: 7%

Sl No	Description of work	Name of the TKC/Supplier	Date of Award	Scheduled date of completion	Status as on 30.10.2023
					Bihpuria 1. Civil and Electrical Design and Drawings review and approval process is going on. 2. Check Survey of associated transmission line approved. 3. Tower design submitted to IITG for vetting. 4.Boundary wall: 25% overall completed. 5. Earth filling: 33.8% overall completed. 6. RE residence:20% overall completed. 8. Transformer 1 pad: 25% and Transformer 2 pad: 25% overall completed. 9. 220 KV GIS Building along with GIS bay foundation: 2%
2	Construction of 220/33kV, 2X100 MVA GIS at two locations (Nagaon-2 &Chaygaon) and Associated Transmission Lines (Package-B)	Consortium Of M/S R.S. Infra Projects Pvt. Limited & M/S Siemens Limited	28.07.2021	02.02.2025	**Nagaon-2** 1. Civil and Electrical Design and Drawings review and approval process is going on. 2. Check survey of LILO of Jawaharnagar-Samaguri at Nagaon-2 is completed. 3. Site office set up is completed. 4. Boundary wall: 55% overall completed 5. Pile foundation work of 220 KV GIS building has been initiated. 6. Security barrack: 25% overall completed 7. Lighting Mast: 80% overall completed

Sl No	Description of work	Name of the TKC/Supplier	Date of Award	Scheduled date of completion	Status as on 30.10.2023
					Chaygaon 1. Civil and Electrical Design and Drawings review and approval process is going on. 2. Boundary wall: 88% overall completed. 3. Check survey of Boko-Chaygaon transmission line is completed. 4. GIS drawing is approved and Foundation work site is completed (overall 60% completed) 5. Foundation of Lightning Mast is completed. 6. Construction of CRB:20% completed.
3	Construction of 132/33kV, 2X50 MVA GIS at locations Burhigaon and associated Transmission Lines (Package C)	M/s Siddhartha Engineering Limited, JV with M/S New Modern Technomech Pvt. Limited (JV Partner)	30.07.2021	06.12.2024	1. Check survey works completed. 2. Civil & Electrical Design and Drawings review and approval process is going on. Inspection and issuance of dispatch Instruction also is in process 3. Items like Insulators, Conductors (Moose, Panther), CVT, wave Trap etc. supplied at site. 4.Boundary wall construction is under process. Excavation 70%, PCC 59%, RRM 56% and Footing/casting 60% is completed 5. Foundation of transformer pad for T1 and T2 80% is completed

Sl No	Description of work	Name of the TKC/Supplier	Date of Award	Scheduled date of completion	Status as on 30.10.2023
					6. Security Barrack/ Staff Hostel: 45% overall completed. 7. Officers Hostel/ RE residence: 45% overall completed. 8. Store Building: 35% overall completed 9. Security Booth: 45% overall completed. 10. GIS building and CRB: 39% overall completed.
4	Construction of 220/132kV, 2X160 MVA; 132/33kV, 2X50 MVA GIS at location (Khumtai) and its associated lines and bay extension (Package-D)	M/s R. S. Infraprojects Pvt. Ltd. JV with M/s Parth Electricals & Engineering Pvt. Ltd.	04.05.2022	01.07.2025	1. Boundary wall: 20% overall completed 2. Check Survey Work for 132KV Khumtai-Sarupathar D/C line is completed. 3. Soil investigation work 100% completed. 4. Site preparation ongoing (95% completed). 5. Tower foundation for bay extension ongoing 6. Construction of 132 KV and 220 KV GIS building initiated. 7. 132 KV Tower foundation design and drawing vetting completed by IITG.
5	Construction of 220/132kV, 2X160 MVA GIS at two location (Sankardevnagar & Agamoni) and its associated lines(Package-E)	M/s Godrej and M/s Boyce Mfg. Co Ltd.	14.10.2021	09.04.2025	**Sankardevnagar** 1. Site handover completed 2.Civil & Electrical Design and Drawings review and approval process is going on 3.Construction of GIS Building Raft & Column under progress and 46% completed. 4.Construction of RE' Residence under progress and 45% completed.

Sl No	Description of work	Name of the TKC/Supplier	Date of Award	Scheduled date of completion	Status as on 30.10.2023
					5.Construction of Security Barrack under progress and 45% completed. 6.Construction of Store Building under progress and 25% completed. 7.Construction of Transformer Pad (excavation & PCC) under progress and 50% completed. 8. Construction of Gantry Towers under progress and 100% completed. 9. Construction of Store Building under progress and 45% completed. 10. Associated construction works under progress. **Agomoni** 1. Site handover completed. 2.Civil & Electrical Design and Drawings review and approval process is going on. 3.Construction of GIS Building Raft & Column under progress and 30% completed. 4.Construction of 145kV Control Room Building under progress and 40% completed. 5.Foundation of Gantry Tower- 2T-1, 2T-2, 1T-3, 1T-2A, 1T-2B, 1T-A1 and 1T-1B Type under progress and 100% completed. 6.Construction of Transformer Pad (excavation, PCC and raft casting is 100 % complete) under progress.

Sl No	Description of work	Name of the TKC/Supplier	Date of Award	Scheduled date of completion	Status as on 30.10.2023
					7. Associated construction works under progress.
6	Construction of 132/33kV GIS Scheme Conversion from AIS at location (Gohpur) (Package-F)	M/s Sumaja Electro Infra Pvt. Ltd.	07.11.2022	08.04.2026	1. Performance Bank Guarantee submitted. 2. Soil investigation is completed. Site layout plan is submitted. 3. Drawing and Design review is in process. 4. ABG submitted. 5. Excavation work and column foundation work initiated.
7	Construction of 400/220kV, 2X500 MVA; 220/132kV 1X160 MVA Rangia GIS and 132/33kV, 2X50 MVA Kumarikata AIS (Package-G)	–	Yet to be awarded	-	1. Master Plan preparation completed. 2. Route Survey completed. 3. Tender Floated on 10/07/2023. Pre-bid meeting concluded on 25//07/2023. Bid Closing Date is 29/08/2023. Queries under review.
8	Construction of 400/220kV, 2X500 MVA GIS at Sonapur GIS and its associated lines and bay extension (Package-H)	–	Yet to be awarded	-	1. Master Plan approval in process. 2. Route survey completed. 3. Forest Clearance to be obtained for transmissionline(3.98km under Aprikola Reserve Forest under DFO Kamrup West. Documents have been submitted in online e-parivesh portal on 19.12.2022. Approval under process. Proposal now at IRO, MOEFCC (GoI) for issuance of in-principal approval.
9	Construction of Approach Road for	M/s High-Tech Eco Green	-	-	1. Tender evaluation completed and NOA issued to M/s High-Tech

Sl No	Description of work	Name of the TKC/Supplier	Date of Award	Scheduled date of completion	Status as on 30.10.2023
	400 KV Sonapur GIS	Contractors LLP			Eco Green Contractors LLP on 25/10/2023
10	Augmentation of Existing Transformer Capacity at Narengi, Kahilipara, Rangia, Kukurmara and Boko Substations of Assam (Package I)	M/S Blue Star Limited	06.09.2021	06.12.2023	1. 05 nos. of 33 KV HGIS, 09 nos. of 50 MVA power transformer (Kukurmara 2 nos, Kahilipara 2 nos, Nalbari, Sishugram and Narengi 1 no. each and Rangia 2 nos.), BDV test kit supplied at site. 2. Supply completed for LA, earthing material, post insulator and isolator. 3. Erection work initiated in Narengi GSS. 4. Contract Amended. Amended price is Rs. 60.33 Crores 5. 2 nos. of 50 MVA Power Trasformer charged at Kukurmara GSS
11	Augmentation of Transformer Capacity at Barnagar, Gauripur, Panchgram and Agia Sub-stations (Package-J)	M/S Hi-Tech Corporation (Jv With M/S Tal)	19.07.2021	06.12.2023	1. 6 nos. 50MVA transformers (Barnagar 2 Nos, Gauripur 2 nos, Panchgram 1 no and Hailakandi 1 no.) and 33 kV, 132 kV & 220 kV CT, 220 KV isolator and mounting structure for 220 KV Isolator and Auto Tr. (160MVA) along with transformer oil and mandatory spares and NIFPS arrived at site. 2.Mounting Structures, BDV Test Kit, LA, 132 KV and 33 KV Isolator and ACSR Moose Conductor, NIFPS, ODS, Transformer Oil (2nd lot), one no. of Bus coupler panel and mounting structure for 132 KV and 33 KV

Sl No	Description of work	Name of the TKC/Supplier	Date of Award	Scheduled date of completion	Status as on 30.10.2023
					isolator, earth mat, electrode, power and control cable and 04 nos. of Oil storage tank arrived at site. 3. 05 nos. of 50 MVA Power transformer charged at Gauripur (2), Barnagar (2) and Panchgram GSS (1). Erection work of balance 01 nos substation under process at Hailakandi. 160 MVA transformer at Agia GSS has been charged. 4. Contract Amended. Amended price is Rs.42.82 Crores
12	Augmentation of Transformer Capacity at Moran, Dibrugarh, Depota, Golaghat & Sankardevnagar sub stations in Assam (Package K)	M/S Siddhartha Engineering Limited	30.09.2021	06.12.2023	1. All 10 nos. of transformers supplied at site namely (Rowta (1), Sishugram (1), Golaghat (2), Moran (1), Samaguri (1), Depota (1), Dibrugarh (1), Khaloigaon (1) and Sarusajai (1)) are successfully commissioned. 2. Supply of 132 KV Isolator completed. 3. Supply of Bus sectionalizer of 33KV HGIS completed. 4. Supply of 33 KV PI and 132 KV CT completed. 5. All 10 nos. NIFPS supplied at site. 6. Contract Amended. Amended price is Rs. 43.16 Crores (1st Amendment) and Rs.41.01 Crores (2nd Amendment)

Sl No	Description of work	Name of the TKC/Supplier	Date of Award	Scheduled date of completion	Status as on 30.10.2023
13	Augmentation of Existing Transmission Lines Capacity (Three Lines) by High Temperature Low Sag (HTLS) Conductor (Package-L)	M/S APAR Industries Limited	23.07.2021	14.08.2023	"1. All GTP/Drawings approved. 2. All materials supplied. 3. Restringing of Gossaigaon-Gauripur line completed and charged on 04.03.2022 and associated works such as identification and replacement/repairing of damaged earthing, dismantling of existing clamps and connectors, accessories from gantry to bus and reconnection with HTLS compatible connector and clamps etc completed. 4. Restringing of 132 KV D/C Salakati-Dhaligaon line is completed and associated works such as identification and replacement/repairing of damaged earthing, dismantling of existing clamps and connectors, accessories from gantry to bus and reconnection with HTLS compatible connector and clamps etc completed. 5. Restringing of 220 KV Sarusajai-Mirza D/C line completed except the railway portion and associated works such as identification and replacement/repairing of damaged earthing, dismantling of existing clamps and connectors, accessories from gantry to bus and reconnection with HTLS compatible connector and clamps etc under process. 6. BOQ Amended. Amended amount is Rs. 99.76 Crores. 7. Ampacity Augmentation of 132 KV Sarusajai-Kamakhya Line included and contract is amended. Amended amount of fresh project is Rs. 106.78 Crores

Sl No	Description of work	Name of the TKC/Supplier	Date of Award	Scheduled date of completion	Status as on 30.10.2023
14	Augmentation of the communication backbone - Replacement of existing ground wire by OPGW (636 KM) (Package M)	M/s Sterlite Power Transmission Ltd.	30.10.2021	17.01.2025	1. Design and Drawings review and approval process is going on. 2. Line survey completed. 3. Sag Tension, FAT, approach cable, FODP, HDE Duct, Joint Box, OPGW Hardware fittings approved. 4. OPGW (Drum Length=637.34 Km) supplied at Mariani Store on 13/07/2022 and Gossaigaon Store on 11/07/2022 5. HDPE duct (2598 Meters) supplied at site on 05/08/2022 6. OPGW hardware fittings supplied at Mariani on10/08/2022 and Gossaigaon on 06/08/2022. 7. DI of FODP issued on 19/08/2022 and material reached site on 11/01/2023. 8. Joint box supplied at site on 14/09/2022. DI of spares issued on 22.06.2022. 9. FOAC reached site on 28/11/2023 10. OPGW Stringing work 220kV Namrup-Mariani line: 141.205 of 141.205 km completed. 11. OPGW Stringing work for 132kV Gossaigaon - Gauripur line: 61.602 of 61.602 km completed. 12. OPGW Stringing work for 132kV Gossaigaon-Dhaligaon line: 48.932 of 59.432 km completed. 13. OPGW Stringing work for 132 KV Gauripur-Bilasipara line: 28.626

Sl No	Description of work	Name of the TKC/Supplier	Date of Award	Scheduled date of completion	Status as on 30.10.2023
					km of 37.028 km completed. 14. OPGW Stringing work for 220 KV Mariani-Samaguri line-55 km out of 167.352 km completed. 15. OPGW Stringing work for 132kV Bilasipara-Kokrajhar line: 23.480 km out of 23.480 km completed. 16. OPGW Stringing work for 132kV Kokrajhar-Salakati line:9.571 km out of 9.571 km completed. 17. OPGW Stringing work for 132kV Dibrugarh-Lakwa line: 63.934 km out of 63.934 km completed. 18.OPGW Stringing work for 132kV Majuli-Nalkata line:36.213 km out of 44.805 km completed. 19. Total Stringing 473 km Completed out of 636 km.
15	Procurement of Enterprise Resource Planing (ERP) (Package N)	M/s Yash Technologies Pvt. Ltd.	28.07.2022	11.11.2026	1. LOA issued on 25/04/2022. 2. Contract Agreement signed on 28/07/2022. 3. Kick-off Meeting concluded on 09/08/2022. 4. Inception report along with project charter and project plan submitted by EPC on 26/08/2022. 5. ERP license (Lot 1) delivered by EPC.
16	Selection of Project Management	PT Feedback Infra Ltd,	02.12.2020	02.12.2025	1. E&S and Civil related Site visit.

Sl No	Description of work	Name of the TKC/Supplier	Date of Award	Scheduled date of completion	Status as on 30.10.2023
	Consultancy (PMC) (Package O)	Indonesia JV with Jade Consult, Nepal and NIPSA, Spain			2. Reviewing Design and Electrical Drawings submitted by EPC. 3. Preparation of Monthly and Quarterly progress reports. 4. Preparation of E&S related Documents are in process.

Summary of Capital Expenditure and Capitalisation of AIIB Projects from FY 2022-23 to FY 2024-25 is tabulated below:

Capital Expenditure from FY 2022-23 to FY 2024-25:

SN	Particulars	Capital Expenditure		
		FY 2022-23	FY 2023-24	FY 2024-25
		Actual	Estimated	Projected
		(Rs. in Crs.)	(Rs. in Crs.)	(Rs. in Crs.)
1	**Construction of 220/33kV, 2X100MVA GIS at two locations (Bihpuria & Jakhalabandha) and associated lines-Pkg A**			
	Bihpuria	0.32	56.86	84.78
	Jakhalabandha	0.40	14.15	23.85
2	**Construction of 220/33kV, 2X100MVA GIS at two locations (Nagaon-2 & Chyagaon) and associated lines-Pkg-B**			
	Nagaon	0.39	14.98	21.62
	Chaygaon	0.40	15.64	17.33
3	Construction of 132/33kV, 2X50 MVA GIS at location (Burhigaon) and its associated lines-Pkg-C	2.73	11.67	14.65
4	Construction of 220/132kV, 2X160 MVA; 132/33kV, 2X50 MVA GIS at location (Khumtai) and its associated lines and bay extension-Pkg-D	11.95	15.06	95.36
5	**Construction of 220/132kV, 2X160 MVA GIS at two location Sankardevnagar & Agamoni) and its associated lines-Pkg-E**			
	Sankardevnagar	2.33	8.32	52.75
	Agamoni	0.13	15.34	45.81
6	Construction of 132/33kV GIS Scheme Conversion from AIS at location (Gohpur)-Pkg-F	0.00	4.08	11.65
7	Construction of 400/220kV, 2X500 MVA GIS; 220/132kV 1X160 MVA GIS; 132/33kV,			

SN	Particulars	Capital Expenditure		
		FY 2022-23	FY 2023-24	FY 2024-25
		Actual	Estimated	Projected
		(Rs. in Crs.)	(Rs. in Crs.)	(Rs. in Crs.)
	2X50 MVA AIS (Kumarikata) at one location (Rangia) and its associated lines and bay extension, Pkg-G			
	Rangia	0.09	27.51	119.57
8	Construction of 400/220kV, 2X500 MVA GIS at location (Sonapur) and its associated lines and bay extension -Pkg-H	0.02	22.30	55.78
9	**Augmentation of Transformation Capacity at five substations (Narengi, Kahilipara, Rangia, Kukumara& Boko)-Pkg-I**			
	Nalbari	3.10	1.42	0.99
	Narengi	3.10	1.83	0.99
	Kahilipara	3.10	8.08	0.99
	Kukurmara	3.10	8.89	0.94
	Boko	3.10	9.29	0.94
	Sishugram	0.70	4.20	2.01
	Rangia	3.10	8.85	0.94
10	**Augmentation of Transformation Capacity at four substations (Barnagar, Panchgram, Agia&Gauripur)-PkG-J**			
	Barnagar	6.78	4.48	1.15
	Panchgram	5.00	0.45	0.19
	Gauripur	6.78	4.55	0.82
	Agia	6.78	7.27	0.82
	Hailakandi	4.23	0.95	0.46
11	**Augmentation of Transformation Capacity at five substations (Dibrugarh, Depota, Golaghat, Sankardevnagar& Moran) Pkg-K**			
	Dibrugarh	5.90	3.06	1.00
	Depota	4.71	0.003	0.00
	Golaghat	6.60	3.49	0.59
	Sarusajai	4.71	0.002	0.00
	Moran	3.61	0.85	0.59
	Rowta	4.51	0.001	0.20
	Sishugram	5.33	0.113	0.20
	Samaguri	4.71	0.001	0.00
12	**Augmentation of Transmission Line Capacity (Three Lines) (HTLS) Pkg-L**			
	132kV BTPS (Salakati)-Dhaligaon) D/C (Panther Equivalent)	7.84	4.04	0.25
	132kV Gossaigaon-Gauripur S/C (Panther Equivalent)	7.84	5.35	0.00
	220kV Kukurmara-Sarusajai D/C (Zebra Equivalent)	7.83	27.10	11.70

SN	Particulars	Capital Expenditure		
		FY 2022-23	FY 2023-24	FY 2024-25
		Actual	Estimated	Projected
		(Rs. in Crs.)	(Rs. in Crs.)	(Rs. in Crs.)
13	Augmentation of the communication backbone - **Replacement of existing ground wire by OPGW (615 kM)**	11.70	32.59	6.07
14	**Project Management Consultant (PMC) services**	6.32	20.55	7.93
15	**ERP**	5.26	13.36	7.97
16	220/33kV, 2X100 MVA **Boragaon GIS with Associated Line**	0.00	3.02	5.09
17	132/33kV, 2X50 MVA **Lumding GIS with Associated Line**	0.00	3.72	4.24
18	132/33kV, 2X50 MVA **Morigaon AIS with Associated Line**	0.00	1.88	3.20
19	132/33kV, 2X50 MVA **Amayapur AIS with Associated Line**	0.00	2.66	3.37
20	132/33kV, 2X50 MVA **Ghungur (Udarband) GIS with Associated Line**	1.68	0.42	2.68
21	132/33kV, 2X50 MVA **Chabua GIS with Associated Line**	0.00	2.20	5.57
22	132/33kV, 2X50 MVA **Dhing AIS with Associated Line**	0.00	2.52	9.60
23	132/33kV, 2X50 MVA **Dhupdhara AIS with Associated Line**	0.00	2.66	10.11
24	132/33kV, 2X50 MVA **Titabor GIS with Associated Line**	0.00	0.23	12.84
25	132/33kV, 2X50 MVA **Serfanguri AIS with Associated Line**	0.00	2.47	9.39
26	220/132kV, 2X160 MVA **Rowta GIS with Associated Line**	0.00	7.89	109.28
27	220/33kV, 2X100 MVA **Panjabari GIS with Associated Line**	0.00	3.45	34.85
28	132/33kV, 2X50 MVA **Agamoni AIS with Associated Line**	0.00	2.56	0.97
29	132/33kV, 2X50 MVA **Zoo Road GIS with Associated Line**	0.00	5.69	53.04
	Total	**156.19**	**418.05**	**855.11**

Capitalisation from FY 2022-23 to FY 2024-25:

SN	Particulars	Capitalisation		
		FY 2022-23	FY 2023-24	FY 2024-25
		Actual	Estimated	Projected
		(Rs. in Crs.)	(Rs. in Crs.)	(Rs. in Crs.)
1	**Construction of 220/33kV, 2X100MVA GIS at two locations (Bihpuria & Jakhalabandha) and associated lines-Pkg A**			
	Bihpuria	-	0.30	1.55

SN	Particulars	Capitalisation		
		FY 2022-23	FY 2023-24	FY 2024-25
		Actual	Estimated	Projected
		(Rs. in Crs.)	(Rs. in Crs.)	(Rs. in Crs.)
	Jakhalabandha	-	0.29	1.45
2	**Construction of 220/33kV, 2X100MVA GIS at two locations (Nagaon-2 & Chyagaon) and associated lines-Pkg-B**			
	Nagaon	-	0.35	1.17
	Chaygaon	-	0.42	1.18
3	Construction of 132/33kV, 2X50 MVA GIS at location (Burhigaon) and its associated lines-Pkg-C	-	3.31	8.71
4	Construction of 220/132kV, 2X160 MVA; 132/33kV, 2X50 MVA GIS at location (Khumtai) and its associated lines and bay extension-Pkg-D	-	0.00	2.26
5	**Construction of 220/132kV, 2X160 MVA GIS at two location Sankardevnagar & Agamoni) and its associated lines-Pkg-E**			
	Sankardevnagar	-	2.02	4.54
	Agamoni	-	0.08	1.76
6	Construction of 132/33kV GIS Scheme Conversion from AIS at location (Gohpur)-Pkg-F	-	0.04	6.00
7	Construction of 400/220kV, 2X500 MVA GIS; 220/132kV 1X160 MVA GIS; 132/33kV, 2X50 MVA AIS (Kumarikata) at one location (Rangia) and its associated lines and bay extension, Pkg-G	-	-	-
	Rangia	2.89	0.1	3.00
8	Construction of 400/220kV, 2X500 MVA GIS at location (Sonapur) and its associated lines and bay extension -Pkg-H	0.00	0.01	0.1
9	**Augmentation of Transformation Capacity at five substations (Narengi, Kahilipara, Rangia, Kukumara& Boko)-Pkg-I**			
	Nalbari	4.32	0.00	2.19
	Narengi	0.00	4.32	2.60
	Kahilipara	4.32	4.32	4.52
	Kukurmara	8.64	0.00	5.23
	Boko	0.00	0.00	14.27
	Sishugram	0.00	0.00	6.92
	Rangia	4.32	4.32	5.19
10	**Augmentation of Transformation Capacity at four substations (Barnagar, Panchgram, Agia&Gauripur)-PkG-J**			
	Barnagar	8.32	0.35	3.84
	Panchgram	4.17	0.00	2.29
	Gauripur	8.32	0.20	4.45
	Agia	11.31	0.23	4.15

SN	Particulars	Capitalisation		
		FY 2022-23	FY 2023-24	FY 2024-25
		Actual	Estimated	Projected
		(Rs. in Crs.)	(Rs. in Crs.)	(Rs. in Crs.)
	Hailakandi	3.98	0.00	2.48
11	**Augmentation of Transformation Capacity at five substations (Dibrugarh, Depota, Golaghat, Sankardevnagar& Moran) Pkg-K**			
	Dibrugarh	7.33	0.00	3.26
	Depota	3.45	0.00	1.85
	Golaghat	6.92	1.00	3.35
	Sarusajai	3.5	0.05	1.75
	Moran	3.46	0.00	2.18
	Rowta	3.45	0.05	1.80
	Sishugram	3.5	0.05	2.09
	Samaguri	3.45	0.00	1.85
12	**Augmentation of Transmission Line Capacity (Three Lines) (HTLS) Pkg-L**			
	132kV BTPS (Salakati)-Dhaligaon) D/C (Panther Equivalent)	-	3.47	0.38
	132kV Gossaigaon-Gauripur S/C (Panther Equivalent)	-	5.53	1.22
	220kV Kukumara-Sarusajai D/C (Zebra Equivalent)	-	0.89	5.46
13	Augmentation of the communication backbone - **Replacement of existing ground wire by OPGW (615 kM)**	-	13.00	1.73
14	**Project Management Consultant (PMC) services**	2.00	4.00	6.00
	Total	**97.65**	**48.70**	**122.75**

Funding of AIIB Projects

Sr	Capital Expenditure	Funding Pattern	FY 2022-23	FY 2023-24	FY 2024-25
			Actual	Estimated	Projected
			(Rs. in Crs.)	(Rs. in Crs.)	(Rs. in Crs.)
A	Counterpart Funding (GoA)-Grant	18%	**28.11**	**75.25**	**153.92**
B	Grant (AIIB)	82%	**128.08**	**342.80**	**701.19**
	Total		**156.19**	**418.05**	**855.11**

Sr	Capitalisation	Funding Pattern	FY 2022-23	FY 2023-24	FY 2024-25
			Actual	Estimated	Projected
			(Rs. in Crs.)	(Rs. in Crs.)	(Rs. in Crs.)
A	Counterpart Funding (GoA)-Grant	18%	**17.58**	**8.77**	**22.10**
B	Grant (AIIB)	82%	**80.07**	**39.94**	**100.66**
	Total		**97.65**	**48.70**	**122.75**

2. Asian Development Bank (ADB)

1. Construction of 132KV DC Chandrapur - Sonapur and 132 KV DC Sonapur- Jagiroad (Baghjap) transmission line:

The construction of transmission line was pending due to non-approval of Forest Clearance. However, forest issue is now resolved. Balance stringing is in progress. Colour SOI Toposheet map depicting 3 (three) alternate routes, duly signed and authenticated by Divisional Forest Officer, Kamrup East Division and justification report for 3 (three) alternate routes regarding diversion of 5.77 Hectare in Teteliguri Reserve Forest for the 132 kV D/C Sonapur Baghjap line has been submitted to Inspector General of Forest (C), Integrated Regional Office, Govt. of India, Ministry of Environment, Forest and Climate Change (MOEFCC) from Govt. of Assam, Environment & Forest Department.

Present Status of Works:

Sl. No	Project Name	Status	Start Date of Project	Original Date of Completion	Target Date of Completion	Reasons for delay in start/completion
1	132 kV DC Chandrapur-Sonapur and 132 Kv DC Sonapur-Jagiroad (Baghjaap) Transmission Line	1) **Overall progress: 98.00%** 2) All the foundation and erection works are completed except stringing of 3 kM which is under forest area.	Nov'11	Nov-13	Mar-24	Forest issue is resolved. Balance stringing is in progress.

Summary of Capital Expenditure and Capitalisation for FY 2022-23 to FY 2023-24 is tabulated below:

SN	Capital Expenditure	Actual FY 2022-23 (Rs. in Crs.)	Estimated FY 2023-24 (Rs. in Crs.)
1	132 kV DC Chandrapur-Sonapur and 132 kV DC Sonapur-Jagiroad (Baghjaap) Transmission Line	3.16	3.32
2	Construction of various Transmission Line, hostels, water supply, culvert cum approach road, construction / repairing of Boundary walls, repairing of IB at different sub-stations, Construction of G+2 Administrative Buildings, Augmentation works, miscellaneous expenditure and associated activities like payment of imprest, repairing of quarters , construction of security barrack, land filling, anti-rust special paint on towers, land & zirat compensation, TA bill, purchase of cables, conductors, administrative expenses like purchase of	1.52	-

	computer, office stationery, furniture etc were carried out under ADB funded schemes and ADB related Counterpart fund as per statement/ annexures received from field officials under whom works were executed. Project was scattered under various substations around Assam, later had to take many relocations of the equipments which resulted into delay in reconciliation.		
	Total	**4.68**	**3.32**

SN	Capitalisation	Actual FY 2022-23 (Rs. in Crs.)	Estimated FY 2023-24 (Rs. in Crs.)
1	132 kV DC Chandrapur-Sonapur and 132 kV DC Sonapur-Jagiroad (Baghjaap) Transmission Line		33.53
2	Construction of various Transmission Line, hostels, water supply, culvert cum approach road, construction / repairing of Boundary walls, repairing of IB at different sub-stations, Construction of G+2 Administrative Buildings, Augmentation works, miscellaneous expenditure and associated activities like payment of imprest, repairing of quarters , construction of security barrack, land filling, anti-rust special paint on towers, land & zirat compensation, TA bill, purchase of cables, conductors, administrative expenses like purchase of computer, office stationery, furniture etc were carried out under ADB funded schemes and ADB related Counterpart fund as per statement/ annexures received from field officials under whom works were executed. Project was scattered under various substations around Assam, later had to take many relocations of the equipment which resulted into delay in reconciliation.	53.24	-
	Total	**53.24**	**33.53**

Capital Expenditure and Capitalisation Funding of ADB Projects

Sr	Capital Expenditure	Funding Pattern	FY 2022-23 Actual (Rs. in Crs.)	FY 2023-24 Estimated (Rs. in Crs.)
A	Counterpart Funding (GoA)	20%	**0.94**	**0.66**
B	*Remaining Part*	80%	**3.74**	**0.65**
B (i)	Grant (ADB)	72%	**3.37**	**2.39**
B (ii)	Grant (GoA)	8%	**0.37**	**0.27**
	Total		**4.68**	**3.32**

Sr	Capitalisation	Funding Pattern	FY 2022-23	FY 2023-24
			Actual	Estimated
			(Rs. in Crs.)	(Rs. in Crs.)
A	Counterpart Funding (GoA)	20%	**10.65**	**6.71**
B	*Remaining Part*	80%	**42.59**	**26.82**
B (i)	Grant (ADB)	72%	**38.33**	**24.14**
B (ii)	Grant (GoA)	8%	**4.26**	**2.68**
	Total		**53.24**	**33.53**

3. Power System Development Fund (PSDF)

The proposal for State support to execute the project "Power System Development Fund" of the Govt. of India has been incorporated in the priority list of transmission & transformation projects of 2019-20. The grid disturbance on 30th & 31st July 2012 in most areas of India forced the M/o Power Govt of India to address the main causes for the incident. During the grid disturbance on 31st July 2012, Assam has suffered a loss of 706 MW of power.

After analysis, the M/o Power Govt of India comes out with a proposal for "Renovation & Up-gradation of the Protection Systems" of the national grid. All the State utilities and the central utilities were asked to submit project proposal for Renovation & Up-gradation of the Protection systems of their grid. Accordingly, the Assam State Electricity Grid Corporation Ltd (AEGCL)proposed and submitted a DPR to the Govt of India (GoI). The GoI has accorded sanctioned as grant under PSDF.

Status of ongoing Projects under PSDF

The capital expenditure of PSDF projects is expected to be completed by FY 2023-24, and, the capitalisation of major portion is expected to be accomplished by end of FY 2023-24.

SN	Projects	Status
A	R&U	Physical -100% completed and Financial - 90% Completed
B	R&U-BCU	Physical -100% completed and Financial - 85% Completed

Summary of PSDF Projects Capital Expenditure and Capitalisation is tabulated below:

SN	Capital Expenditure	FY 2022-23 Actual (Rs. in Crs.)	FY 2023-24 Estimated (Rs. in Crs.)
A	R&U	16.0 1	12.12
B	R&U-BCU	0.00	5.03
	Total	**16.01**	**17.15**

SN	Capitalisation	FY 2022-23 Actual (Rs. in Crs.)	FY 2023-24 Estimated (Rs. in Crs.)
A	R&U	21.46	10.54
B	R&U-BCU	0.00	8.94
	Total	**21.46**	**19.48**

Funding of PSDF Projects

SN	Capital Expenditure	Funding Pattern	FY 2022-23 (Rs. in Crs.)	FY 2023-24 (Rs. in Crs.)	FY 2024-25 (Rs. in Crs.)
A	GoI – PSDF	100% Grant	16.01	17.15	0.00
	Total		**16.01**	**17.15**	**0.00**

SN	Capitalisation		FY 2022-23	FY 2023-24	FY 2024-25

		Funding Pattern	(Rs. in Crs.)	(Rs. in Crs.)	(Rs. in Crs.)
A	GoI – PSDF	100% Grant	21.46	19.48	0.00
	Total		**21.46**	**19.48**	**0.00**

4. Trade Development Fund (TDF)

1. Construction of 132/33 kV Barpeta substation with LILO from 132 kV Dhaligaon-Nalbari line on D/C Tower

The Project for "the construction of 132/33 kV Barpeta substation with 132 kV S/C line on D/C tower from LILO of 132kV Dhaligaon-Nalbari line" has been completed & charged on 27.02.2022. Because of which the voltage profile of downstream network power in and around Barpeta has been improved. As such, system stability has been increased and along with reduction in transmission loss.

2. Construction of 132/33 kV Hatsingimari substation with 132 kV S/C Agia-Hatsingimari line on D/C Tower

The power feeding to the distribution network of South Salmara, Hatsingimari, Mankachar, etc areas has been done from AEGCL grid network through proposed the construction of the 132/33 kV Hatsingimari substation with 116 km of 132 kV S/C line on D/C tower from Agia. The project has been commissioned in FY 2023-24.

This has helped improving voltage profile, system stability reducing load shedding in the concerned area.

3. Construction of 132 KV S/C line on D/C tower from Salakati to APM

To improve the system stability and to feed quality power to the distribution network via grid sub-stations at Dhaligaon, APM, and Nalbari, construction of 132 kV S/C BTPS-APM line on D/C tower is urgently required. This line is very much essential from the redundancy plan point of view, and it will give an alternative route of power feeding to the aforesaid sub-station. It will thus reduce probability of the systems instability of power feeding to the distribution network of concerned areas covering entire Chirang, Bongaigaon, Abhyapuri & Chapar area.
Currently, Forest clearance is yet to be received at 2 locations under Aie Valley Forest Division and Stage I forest clearance received for 3 locations under Haltugaon Division.
Due to fund constraint progress has slowed down. Fund issue has been taken up with GoA and likely to be resolved soon.

Status of ongoing Projects:

Sl. No	Project Name	Status	Start Date of Project	Original Date of Completion	Target Date of Completion	Reasons for delay in start/completion
1	Construction of 132/33 KV Hatsingimari GSS	Completed and commissioned on 02.06.2023	Oct, 2016	Mar, 2019	June, 2023	1. ROW Issue 2. Fund Constraint
2	132 KV S/C line on D/C tower from Agia to Hatsingimari	Completed and commissioned on 02.06.2023	Oct, 2014	Apr, 2016	June, 2023	1. ROW Issue 2. Fund Constraint

Sl. No	Project Name	Status	Start Date of Project	Original Date of Completion	Target Date of Completion	Reasons for delay in start/completion
3	132 KV LILO to Barpeta from Dhaligaon-Nalbari line	Completed and charged on 27.02.2022	April, 2016	Apr, 2018	Feb, 2022	1. ROW Issue 2. Fund Constraint
4	132 /33 KV Barpeta GSS	Completed and charged on 27.02.2022	Feb, 2016	Feb, 2018	Feb, 2022	
5	132 KV S/C line on D/C tower from Salakati to APM	Around 76% of Work completed Total (Nos): 157 Stub Cons (Nos): 142 Erected (Nos): 122 Stringing: Nil	Feb, 2015	Aug, 2016	Jan, 2025	1. Forest clearance is yet to be received at 2 locations under Aie Valley Forest Division and 2. Stage I forest clearance received for 3 locations under Haltugaon Division.

Summary of TDF Projects Capital Expenditure and Capitalisation is tabulated below:

SN	Capital Expenditure	FY 2022-23 Actual (Rs. in Crs.)	FY 2023-24 Estimated (Rs. in Crs.)	FY 2024-25 Projected (Rs. in Crs.)
1	Hatsingimari GSS	-	2.89	-
2	Barpeta substation, 132/33kV, 2x25MVA	-	2.01	-
	SS Total	**0.00**	**4.89**	**0.00**
1	Construction of 132 KV S/C line on D/C tower from Salakati to APM	-	6	4.16
2	Construction of 132 KV LILO from Dhaligaon – Nalbari line	1.86	-	-
3	Construction of 132 KV S/C line on D/C tower from Agia to Hatsingimari (Package_A&B)	-	5.94	-
	Trans. Lines Total	**1.86**	**11.94**	**4.16**
	Total (S/S and Trans. Line)	**1.86**	**11.94**	**4.16**

SN	Capitalisation	FY 2022-23 Actual (Rs. in Crs.)	FY 2023-24 Estimated (Rs. in Crs.)	FY 2024-25 Projected (Rs. in Crs.)
1	Hatsingimari GSS	-	23.16	-
2	Barpeta substation, 132/33kV, 2x25MVA	11.03	12.85	-
	SS Total	**11.03**	**36.01**	**0.00**

SN	Capitalisation	FY 2022-23 Actual (Rs. in Crs.)	FY 2023-24 Estimated (Rs. in Crs.)	FY 2024-25 Projected (Rs. in Crs.)
1	Construction of 132 KV S/C line on D/C tower from Salakati to APM	-	-	30.85
2	Construction of 132 KV LILO from Dhaligaon-Nalbari line	23.11	-	-
3	Construction of 132 KV S/C line on D/C tower from Agia to Hatsingimari (Package_A&B)	-	67.69	-
	Trans. Lines Total	**23.11**	**67.69**	**30.85**
	Total (S/S and Trans. Line)	**34.14**	**103.695**	**30.85**

Funding of TDF Projects

Sr	Capital Expenditure	Funding Pattern %	FY 2022-23 Actual (Rs. in Crs.)	FY 2023-24 Estimated (Rs. in Crs.)	FY 2024-25 Projected (Rs. in Crs.)
A	GoA- Grant	100%	1.86	16.83	4.16
	Total	**100%**	**1.86**	**16.83**	**4.16**

Sr	Capitalisation	Funding Pattern %	FY 2022-23 Actual (Rs. in Crs.)	FY 2023-24 Estimated (Rs. in Crs.)	FY 2024-25 Projected (Rs. in Crs.)
A	GoA- Grant	100%	34.14	103.70	30.85
	Total	**100%**	**34.14**	**103.70**	**30.85**

5. NERPSIP

GOI sanctioned "North Eastern Region Power System Improvement Project" (NERPSIP) on 01.12.2014 for six NER states (Assam, Meghalaya, Manipur, Tripura, Nagaland & Mizoram) for strengthening of Intra State Transmission and Distribution System. The Scheme is implemented as Central Sector Scheme through POWERGRID as per sanction of the President of India conveyed to the NERPSIP for six (6) states with completion schedule of 48 months from the date of release of 1st instalment of funds to PGCIL. The Implementation/Participation Agreement between Assam (AEGCL/APDCL) and PGCIL was signed on 29th May,2015.

The project is funded 50% through World bank fund and 50% by GoI through MoP Budget. State Government shall reimburse all form of State level taxes, duties and levies. The Government of India (Ministry of Power) shall be the borrower of the Bank loan and the total loan (the Bank loan and GoI/MoP budgetary support) shall be made directly available by GoI to Implementing Agency, POWERGRID for phase wise implementation on behalf of AEGCL. The ownership of the assets lies with AEGCL and upon progressive commissioning, the project elements shall be taken over by AEGCL for operation and maintenance on their own at their own cost.

In the scope of NERPSIP-Assam, the following are being done by POWERGRID:

(i) Eleven (11) nos. of new EHV Sub stations of which three (3) will be GIS and rest will be AIS.
(ii) Augmentation of two (2) existing sub stations at Samaguri and Dhaligaon.
(iii) The scheme also involves Turnkey Tower Package at various location.
(iv) Procurement of 27 nos. of transformers.
(v) Pile foundation work at 9 locations over River Brahmaputra
(vi) Approximately 740 kms of OPGW including existing and new Transmission lines (216km).
(vii) Capacity Building and Institutional Strengthening of Assam electricity transmission and distribution scenario has been taken up.

The project status report of ongoing works carried out under NERPSIP provided by PGCIL is provided as **Annexure-V(A)** for your kind reference.

Summary of NERPSIP Projects Capitalisation is tabulated below:

SN	Package Name	FY 2023-24 Estimated (Rs. in Crs.)
1	ASM-SS-01	66.25
2	ASM-SS-02	86.17
3	ASM-SS-03	46.12
4	ASM-SS-04	217.57
5	Tr-01	99.21
6	ASM P01	28.50
7	TW02	38.07
8	TW04	20.69
9	TW05	13.06

SN	Package Name	FY 2023-24 Estimated (Rs. in Crs.)
10	TW-07	65.89
11	ASM OPGW01	8.23
	Total	**689.76**

Funding of NERPSIP Projects

Sr	Capitalisation	Funding Pattern (%)	FY 2023-24 Estimated (Rs. in Crs.)
A	GoI- Grant	50%	344.88
B	World Bank- Grant	50%	344.88
	Total	**100%**	**689.76**

Kindly note that the ongoing projects were commenced in the previous/current years and thus the capital expenditure has been incurred directly by GOI. Hence, capital expenditure is not reflected in the account of AEGCL. However, the projects once capitalised, shall reflect capitalisation in account of AEGCL as the ownership of the assets lies with AEGCL and the project elements shall be taken over by AEGCL for operation and maintenance on their own at their own cost.

6. Assam Infrastructure Financing Authority (AIFA)

The proposal for Construction of 132/33kV, 2x50 MVA Nathkuchi Substation and associated Transmission Lines has been approved by Govt. of Assam under the Assam Infrastructure Funding Authority "AIFA" vide Revised AA No. No. PEL.192/2017/103 dtd11.10.2019.

The 132/33 kV Nathkuchi substation will help to address the load demand at Pathsala Bhabanipur, Harupather, Nathkuchi, KhudraBhaluki, Boroma and Mushalpur as there is a trend of increase in domestic, commercial and industrial loads. The project will further lead to:

a) Increase in power transformation capacity and improvement in voltage profile of the grid system as well as power distribution network in and around Pathsala.
b) Minimization of overloading condition of Nalbari and Barnagar Grid sub-stations. About 14MWs of Nalbari substation & 15 MWs of Barnagar load can be diverted to Nathkuchi new substation which will ease the overloading conditions of these substations.
c) This new substation will ease severe load shedding scenario around the area.
d) Increase in revenue through additional installed capacity.
e) Enhanced power reliability & better customer service.

Turnkey Construction has been split into two parts, considering the nature of works, as follows:

1) Turnkey Construction of 2x50 MVA, 132/33 kV Nathkuchi Substation with associated Transmission Line (LILO of 132kV Transmission Line from Rangia GSS to Barnagar GSS at Nathkuchi). The expected date of completion is Dec'2023.
2) Supply and Erection of HTLS Conductors along with all accessories from132 kV Rangia Substation to Nathkuchi Substation on turnkey basis. The work has completed in April' 2022.

Summary of AIFA Projects Capital Expenditure and Capitalisation is tabulated below:

Sr	Capital Expenditure	FY 2022-23 Actual (Rs. in Crs.)	FY 2023-24 Estimated (Rs. in Crs.)	FY 2024-25 Projected (Rs. in Crs.)
1	Turnkey Construction of 2x50 MVA, 132/33 kV Nathkuchi Substation with associated Transmission Line (LILO of 132kV Transmission Line from Rangia GSS to Barnagar GSS at Nathkuchi)	9.31	19.58	2.83
	Total	**9.31**	**19.58**	**2.83**

Sr	Capitalisation	FY 2022-23 Actual (Rs. in Crs.)	FY 2023-24 Estimated (Rs. in Crs.)	FY 2024-25 Projected (Rs. in Crs.)
1	Turnkey Construction of 2x50 MVA, 132/33 kV Nathkuchi Substation with associated Transmission Line (LILO of 132kV Transmission Line from Rangia GSS to Barnagar GSS at Nathkuchi)	-	46.43	22.41
	Total	**0.00**	**46.43**	**22.41**

Funding of AIFA Projects

Sr	Capital Expenditure	Funding Pattern (%)	FY 2022-23 Actual (Rs. in Crs.)	FY 2023-24 Estimated (Rs. in Crs.)	FY 2024-25 Projected (Rs. in Crs.)
A	GoA- Grant	100%	9.31	19.58	2.83
	Total	**100%**	**9.31**	**19.58**	**2.83**

Sr	Capitalisation	Funding Pattern (%)	FY 2022-23 Actual (Rs. in Crs.)	FY 2023-24 Estimated (Rs. in Crs.)	FY 2024-25 Projected (Rs. in Crs.)
A	GoA- Grant	100%	0.00	46.43	22.41
	Total	**100%**	**0.00**	**46.43**	**22.41**

7. AIIMS

In order to supply power to the upcoming AIIMS at CHANGSARI, Guwahati, AEGCL has completed construction of 1X25 MVA, 132/33KV substation at AIIMS campus along with associated transmission line.

The Health & Family Welfare Dept., Govt of Assam has approved the project and issued Administrative Approval vide letter no. AA/DME_2019-20(I)_309dtd. 19.07.2019 for Rs. 4198.74 Lakhs. The substation along with associated transmission line was made operational on 30.12.2022.

Summary of AIIMS Projects Capital Expenditure and Capitalisation is tabulated below:

Sr	Capital Expenditure	FY 2022-23	FY 2023-24	FY 2024-25
		Actual	Estimated	Projected
	Package Name	(Rs. in Crs.)	(Rs. in Crs.)	(Rs. in Crs.)
1	1x25 MVA, 132/33 kV AIIMS GSS, Changsari along with associated Line	0.00	6.94	5.00
	Total	**0.00**	**6.94**	**5.00**

Sr	Capitalisation	FY 2022-23	FY 2023-24	FY 2024-25
		Actual	Estimated	Projected
	Package Name	(Rs. in Crs.)	(Rs. in Crs.)	(Rs. in Crs.)
1	1x25 MVA, 132/33 kV AIIMS GSS, Changsari along with associated Line	22.52	3.94	8.00
	Total	**22.52**	**3.94**	**8.00**

Funding of AIIMS Projects

Sr	Capital Expenditure	Funding Pattern (%)	FY 2022-23	FY 2023-24	FY 2024-25
			(Rs. in Crs.)	(Rs. in Crs.)	(Rs. in Crs.)
A	GoA- Grant	100%	0.00	6.94	5.00
	Total	**100%**	**0.00**	**6.94**	**5.00**

Sr	Capitalisation	Funding Pattern (%)	FY 2022-23	FY 2023-24	FY 2024-25
			(Rs. in Crs.)	(Rs. in Crs.)	(Rs. in Crs.)
A	GoA- Grant	100%	22.52	3.94	8.00
	Total	**100%**	**22.52**	**3.94**	**8.00**

8. Annual Plan/SOPD-G

1. **Augmentation of transformer capacity of 132/33 kV Nalbari sub-station from 1x40 MVA + 1x16 MVA to 1x50 MVA + 1x40 MVA**
   Considering the sharply increasing load demand of 132/33 kV Nalbari sub-station, augmentation of transformer capacity of the sub-station was urgently required. Major part of the Nalbari district was already suffering from load shedding especially during peak load hours of summer season. Therefore, it was decided to augment existing transformer capacity of the 132/33 kV Nalbari sub-station in order to take care of present and future load growth.

2. **Augmentation of transformer capacity of 132/33 kV Khaloigaon sub-station from 2x25 MVA to 1x25 + 1x50 MVA**
   Considering the sharply increasing load demand of 132/33 kV Khaloigaon sub-station, augmentation of transformer capacity of the sub-station was urgently required. Major part of the Nagaon district was already suffering from load shedding especially during peak Load hours of summer season. Therefore, it was decided to augment existing transformer capacity of the 132/33 kV Khaloigaon sub-station in order to take care of present and future Load growth.

3. **Construction of 220 kV D/C Sonabil- Biswanath Chariali line with 2 nos. of 220 kV line bay for Sonabil Sub-station**
   This proposal would contribute to enhance the current power situation on the north bank of the Brahmaputra River as the system will be directly connected to the 220 KV thereby enhance the power scenario. Also, in turn enhancing commercial and trade activities in Upper Assam Region, hence improving the socio-economic scenario and directly benefiting residents/workers of the connected region.

4. **2nd Circuit Stringing of 132kv,41.923 KM Long Samaguri-Khaloigaon (Nagaon) line on D/C tower of AEGCL. (41.923km long)**
   The 220KV GSS Type-I Samaguri was connected to the 132 kV GSS Type-II Khaloigaon through the 132 KV 41.923 KM Long Samaguri-Khaloigaon (Nagaon) line S/C line on D/C tower. As this line was the only circuit linking power to both the substations without any redundancy, it was proposed to string a second circuit on the existing D/C tower so that the power supply from the substations will be more reliable in addition to the fulfilment of (n-1) contingency of CEA guidelines. The substations supply power to the connected region in major part of the Nagaon & Morigaon district which was already suffering from severe load shedding especially during peak Load hours of summer season. Thus, for reliability of power, stringing of second circuit between Samaguri-Khaloigaon (Nagaon) was an essential requirement and have greatly impacted the beneficiaries.

5. **Hotline stringing of 2nd circuit of 132kV Kukurmara (Mirza) – Azara transmission line**

   132/33 KV Azara substation is radially connected to 400/220/132/33 KV Kukurmara (Mirza) substation through the 132 KV Azara-Kukurmara (Mirza) S/C line on D/C tower, which was completed in December, 2019. As this line is the only circuit that feeds power to Azara substation without any redundancy, it was proposed to string a second circuit on the existing D/C tower so that the power supply from the Azara substation will be more reliable in addition to the fulfilment of (n-1) contingency of CEA guidelines. The 132/33 KV Azara substation supplies power to Palashbari, Mirza and vital areas of Airport and nearby. Thus, for reliability of power, stringing of second circuit between Kukurmara (Mirza)- Azara was an essential requirement and will have a great impact on the beneficiaries.

6. **Construction of 01 no. of 132kV line bay at 132/33kV Azara substation along with associated PLCC work at 400/220/132/33 kV Kukurmara (Mirza)**

   132/33 KV Azara substation is radially connected to 400/220/132/33 KV Kukurmara (Mirza) substation through the 132 KV Azara-Kukurmara (Mirza) S/C line on D/C tower, which was completed in December, 2019. As this line is the only circuit that feeds power to Azara substation without any redundancy, it was proposed to string a second circuit on the existing D/C tower so that the power supply from the Azara substation will be more reliable in addition to the fulfilment of (n-1) contingency of CEA guidelines. The 132/33 KV Azara substation supplies power to Palashbari, Mirza and vital areas of Airport and nearby. Thus, for reliability of power, stringing of second circuit between Kukurmara (Mirza)- Azara was an essential requirement. Also, the envisaged work for constructing the second circuit will also require construction of one no. of 132 kV bay at Azara GSS. The bay at Kukurmara end is ready with all equipment installed. However, the PLCC equipment for the link at both ends is required.

7. **Hotline OPGW Stringing in 132kV Kukurmara (Mirza)-Azara Line**
   As per directives received from NERPC, line differential relay is required for short lines. As such fibre communication is required for establishing link between both end of the relays in addition to enhancing the reliability of data communication with SLDC. Therefore, the work was taken up by AEGCL under SOPD/Annual Scheme. The project was completed on 25.04.2023

8. **Turnkey Construction of 2 (two) nos. of 132kV Line Bays including Supply of Bay Equipment and line bay materials and associated works etc. at Gohpur GSS, AEGCL**
   At present 132/33 kV Gohpur sub-station caters to 120-125 MW load to four nos. of districts viz. Lakhimpur, Dhemaji, part of Biswanath and Majuli. Gohpur substation is fed from two transmission lines one from Biswanath Chariali (AEGCL) sub-station and

another from Sonabil grid sub-station. Due to Increasing load demand at Gohpur sub-station, Gohpur was facing overloading problem. To resolve this problem there was need of another power flow route to feed additional power to Gohpur substation from Biswanath Chariali (800 kV HVDC PGCIL) sub-station.

Therefore, a transmission line from Biswanath Chariali (PGCIL) to Itanagar was being implemented as a part of NERSS-II by Power Grid Corporation of India Ltd. through TBCB. In the meeting of 6th standing committee on Power System Planning of North Eastern Region (6th SCPSPNER) held on 03.10.2019, it was proposed to construct a LILO of Biswanath Chariali (PGCIL) -- Itanagar line at Gohpur substation in order to solve the power constraint issue at Gohpur sub-station and to reduce the power flow on the Biswanath Chariali (PG) – Pavoi (AEGCL) 132kV D/c line by 30 MW. The part of the line from Biswanath Chariali (PGCIL) to Gohpur has already been constructed. To terminate the LILO of Biswanath Chariali (PGCIL) -- Itanagar line at Gohpur substation, 2 nos. of bays were required to be constructed. However, during a meeting held on 10.08.2020, CEA directed AEGCL to take up the construction works for the two bays on an urgent basis. CEA further stated that the delay in construction of the bays shall result in PoC Charges, which will adversely impact the transmission tariff payable by Assam. Given the above, the construction of 2 nos. of bays at Gohpur (AEGCL) end was of utmost importance. The project was completed & Test charged in Nov'2022.

9. **Revival of Srikona-Panchgram Line using Composite Insulated Cross-Arm Technology**

132KV Panchgram-Srikona line is a vital transmission link for stability & reliability at Panchgram, Srikona & Pailapool GSS's, which cater to the major share of load demand of Barak Valley. Prolonged outage of this section of the line has resulted in loss of redundancy of transmission corridor linking these sub-stations as in the event of outage of 132KV S/C Badarpur (PGCIL) – Panchgram line & 132KV S/C Panchgram-Hailakandi line, there is every likelihood of power collapse at Panchgram (in the absence of 132KV Panchgram-Srikona link). Srikona GSS being situated near the Silchar (PGCIL) sub-station, the voltage stability is higher and re-commissioning of 132KV Panchgram-Srikona line will enable Panchgram GSS to get better voltage stability. Also, due to capacity constraint at 132KV Jiribam (PGCIL)-Pailapool S/C Line, security of Srikona GSS is at lower side, as in the event of outage of 132KV Silchar (PGCIL) – Srikona line, Srikona & Pailapool GSS either face bus collapse or severe load restriction. Prolonged outage of 132KV Srikona-Panchgram line has resulted in the lowering of availability factor which has impacted AEGCL financially since the AERC's tariff offers either entails penalty charge or slash of incentive. So, for stability & reliability of power system in the entire Barak Valley region, revival of collapsed section of 132KV Srikona-Panchgram Line is urgently needed.

10. **Augmentation of 2x100 MVA, 220/132 KV Rangia GSS By 2x200 MVA Auto-Transformer (Phase-I)**

220/132 KV Rangia GSS caters load demand of several 132/33 KV GSS viz. Nalbari, Sipajhar, Kamalpur and Barnagar including Rangia. 220/132 KV Rangia GSS presently have two nos. of 100 MVA auto-transformer installed. During the peak load, both the transformers get loaded almost up to full capacity. Due to these transformer constraints, the incoming power from Deothang Hydroelectric project is affected/interrupted in case of sudden tripping of 100 MVA transformers due to overload. Also, frequent blackout occurs due to the saturation of 2X100 MVA transformers at Rangia GSS. Hence, to improve the power scenario in Lower Assam region and to enhance grid stability, it is necessary to augment the transformation capacity of Rangia GSS from 2X100 MVA to 2X200 MVA. This will not only improve the present power scenario but will also cope with the increased demand in the coming years. The project has been taken up in phase manner. In the phase-I, 1 no. of 200MVA transformer along with augmentation of 2 no. bays has been taken up and the work is in progress.

11. Supply of 33 KV Equipment for Augmentation Works at 132 KV Srikona GSS

As per letter received from the DGM, Silchar T&T Circle, AEGCL, it was informed that new CT of higher ratio was required in 33KV Malinibali, PGCIL, Srikona & Silchar-II Feeder Bay (as suggested by T&C Division, Silchar). This is due to increased demand and the existing CT's are in service since commissioning of the GSS in 2009. Also, existing isolators which are in service need replacement as these are not motorized, not SCADA compatible & are in service since commissioning of the GSS. Further, the LA's need replacement as the same are in service since commissioning of the GSS. Also, the CB of 33 KV Silchar-II Feeder need replacement as CRM value was found to be beyond permissible limit and the breaker is in service since commissioning of the GSS. As such, provisional estimate was forwarded from field for procurement of 33 KV level equipment towards augmentation of 33 KV Malinibil, PGCIL, Srikona & Silchar-II Feeder at 132 KV Srikona GSS, considering actual site requirement. Accordingly, e-tendering was done for procurement of 33 KV Equipment (CT, CB, Isolator and LA). Work was awarded on 25.08.2023 and is currently under progress.

Summary of Annual Plan/SOPD-G Projects Capital Expenditure and Capitalisation is tabulated below:

Sr	Capital Expenditure	FY 2022-23	FY 2023-24	FY 2024-25
		Actual	Estimated	Projected
	Package Name	(Rs. in Crs.)	(Rs. in Crs.)	(Rs. in Crs.)
1	Augmentation of transformer capacity of 132/33 kV Nalbari sub-station from 1x40 MVA + 1x16 MVA to 1x50 MVA + 1x40 MVA	0.67	0.00	0.00
2	Augmentation of transformer capacity of 132/33 kV Khaloigaon sub-station from 2x25 MVA to 1x25 + 1x50 MVA	-	1.62	0.00

Sr	Capital Expenditure	FY 2022-23	FY 2023-24	FY 2024-25
		Actual	Estimated	Projected
	Package Name	(Rs. in Crs.)	(Rs. in Crs.)	(Rs. in Crs.)
3	Construction of 220 kV D/C Sonabil - Biswanath Charali line with 2 nos. 220 KV line bay. (42.768 km long as per tower schedule)	0.00	0.00	0.00
4	2nd Circuit Stringing of 132kv,41.923 KM Long Samaguri-Khalaigaon (Nagaon) line on D/C tower of AEGCL. (41.923km long)	0.05	0.83	0.00
5	Hotline stringing of 2nd circuit of 132kV Kukurmara (Mirza)-Azara transmission line	-	0.00	0.00
6	Construction of 01 no. of 132kV line bay at 132/33kV Azara substation along with associated PLCC work at 400/220/132/33 kV Kukurmara (Mirza) substation	0.76	0.95	0.00
7	Hotline OPGW Stringing in 132 KV Kukurmara (Mirza)-Azara Line	0.00	0.09	0.00
8	Turnkey Construction of 2 (two) nos. of 132kV Line Bays including Supply of Bay Equipment and line bay materials and associated works etc. at Gohpur GSS, AEGCL	-	1.22	0.00
9	Revival of Srikona - Panchgram Line using Composite Insulated Cross-Arm Technology	0.00	0.20	2.35
10	Augmentation of 2x100 MVA, 220/132 KV Rangia GSS By 2x200 MVA Auto-Transformer (Phase-I)	0.00	0.00	7.00
11	Supply of 33 KV Equipment for Augmentation Works at 132 KV Srikona GSS	0.00	0.30	0.00
	Total	**1.48**	**5.22**	**9.35**

Sr	Capitalisation	FY 2022-23	FY 2023-24	FY 2024-25
		Actual	Estimated	Projected
	Package Name	(Rs. in Crs.)	(Rs. in Crs.)	(Rs. in Crs.)
1	Augmentation of transformer capacity of 132/33 kV Nalbari sub-station from 1x40 MVA + 1x16 MVA to 1x50 MVA + 1x40 MVA	-	5.62	

Sr	Capitalisation	FY 2022-23	FY 2023-24	FY 2024-25
		Actual	Estimated	Projected
	Package Name	(Rs. in Crs.)	(Rs. in Crs.)	(Rs. in Crs.)
2	Augmentation of transformer capacity of 132/33 kV Khaloigaon sub-station from 2x25 MVA to 1x25 + 1x50 MVA		5.62	
3	Construction of 220 kV D/C Sonabil – Biswanath Charali line with 2 nos. 220 KV line bay. (42.768 km long as per tower schedule)			25.56
4	2nd Circuit Stringing of 132kv,41.923 KM Long Samaguri-Khalaigaon (Nagaon) line on D/C tower of AEGCL. (41.923km long)	5.36	1.60	
5	Hotline stringing of 2nd circuit of 132kV Kukurmara (Mirza)-Azara transmission line	0.46		
6	Construction of 01 no. of 132kV line bay at 132/33kV Azara substation along with associated PLCC work at 400/220/132/33 kV Kukurmara (Mirza) substation		1.71	
7	Hotline OPGW Stringing in 132 KV Kukurmara (Mirza)-Azara Line		0.09	
8	Turnkey Construction of 2 (two) nos. of 132kV Line Bays including Supply of Bay Equipment and line bay materials and associated works etc. at Gohpur GSS, AEGCL	2.69	1.29	
9	Revival of Srikona-Panchgram Line using Composite Insulated Cross-Arm Technology	-	-	2.55
10	Augmentation of 2x100 MVA, 220/132 KV Rangia GSS By 2x200 MVA Auto-Transformer (Phase-I)	-		-
11	Supply of 33 KV Equipment for Augmentation Works at 132 KV Srikona GSS		0.3	
	Total	**8.51**	**16.23**	**28.11**

Funding of SOPD-G Projects

Sr	Capital Expenditure	Funding Pattern (%)	FY 2022-23	FY 2023-24	FY 2024-25
			(Rs. in Crs.)	(Rs. in Crs.)	(Rs. in Crs.)
A	GoA	100%	1.48	5.22	9.35
	Total	**100%**	**1.48**	**5.22**	**9.35**

Sr	Capitalisation	Funding Pattern (%)	FY 2022-23	FY 2023-24	FY 2024-25
			(Rs. in Crs.)	(Rs. in Crs.)	(Rs. in Crs.)
A	GoA	100%	8.51	16.23	28.11
	Total	**100%**	**8.51**	**16.23**	**28.11**

9. Deposit Works

1. Deposit Works Funded by NRL

Rapid expansion of the production capacity of the petroleum sector in Assam is expected to increase the load demand significantly. As the refineries gear up to start production of BS-VI petroleum products, it will increase their power demand. To meet up with the increased load demand of the Refineries in Assam several projects are being executed under deposit scheme.

1. Construction of 220kV LILO to NRL substation from Samaguri-Mariani-2 TL

Summary of Capitalisation is tabulated below

SN	Capitalisation	FY 2023-24 Estimated (Rs. In Crs.)	FY 2024-25 Projected (Rs. In Crs.)
1	Construction of 220kV LILO to NRL substation from Samaguri-Mariani-2	11.32	-
	Total	**11.32**	**0.00**

2. Deposit Scheme funded by Railways

Railway is executing electrification of railway network in Assam at a rapid pace through RVNL, RITES, IRCON, NF Constructions and CORE. These projects are being executed with a vision to reduce dependency on imported fossil fuel-based petroleum products. This will enable railway use greener power and reduce its carbon footprint. As a part of this ambitious project, AEGCL has been entrusted with construction of several 132kV transmission lines to the Railway Traction substation and terminal line bays at AEGCL end.

Summary of Capitalisation is tabulated below:

A) Deposit Scheme funded by NFCON

SN	Capitalisation	FY 2024-25 Projected (Rs. in Crs.)
1	132kV bay at Rowta GSS	2.41
2	220 kV bay at Sonabil GSS	3.32
3	132kV bay at Nalkata GSS	2.37
4	132kV bay at Dhemaji GSS	2.53
5	132kV bay at Gohpur GSS	2.24
6	132kV bay at Silapathar GSS	2.17
7	132kV bay at Jorhatwest GSS	1.31
8	132kVbay at Khaloigaon GSS	2.34
	Total	**18.69**

B) Deposit Scheme funded by CORE

SN	Capitalisation	FY 2023-24 Estimated (Rs. In Crs.)	FY 2024-25 Projected (Rs. in Crs.)
1	Construction of 132 kV Bay at Agia GSS	-	1.43
2	Construction of 132 kV Bay at Boko GSS	-	1.43
3	Construction of 132 kV Bay at Baghjab GSS	1.42	-
4	Construction of 132 kV Bay at Shankardev Nagar GSS	-	1.43
5	Construction 132kV TL from Agia GSS to Goalpara TSS	-	10.48
6	Construction 132kV TL from Boko GSS to Boko TSS	-	3.58
7	Construction 132kV TL from Baghjap GSS to Dharamtul TSS	-	11.27
	Total	**1.42**	**29.62**

C) Deposit Scheme funded by RVNL

SN	Capitalisation	FY 2022-23 Actual (Rs. in Crs.)	FY 2023-24 Estimated (Rs. in Crs.)	FY 2024-25 Projected (Rs. in Crs.)
1	Construction of 132kV TL from Dhaligaon GSS-New Bongaigaon TSS	12.97	-	-
2	Construction of 132kV TL from Joyma GSS to Gossaigaon TSS	7.22	-	-
3	Construction of 132kV Barnagar - Sorbhog Traction Line	4.44	-	-
4	Construction of 132kV Barnagar - Sorbhog Traction Line (Cable portion)	5.05	-	-
5	Construction of 132kV feeder bay for Sorbhog Railway traction substation at barnagar GSS	1.45	-	-
6	Construction of 132kV feeder bay for Nalbari Traction line at Nalbari GSS	-	-	-
7	Construction of 132kV feeder bay for Dhaligaon Traction line at Dhaligaon GSS	1.27	-	-
8	Construction of 132kV feeder bay for Joyma Traction line at Joyma GSS	1.48	-	-
9	Survey for feasbility study for route from 132KV Kamakhya GIS to down side of Kamakhya view point	-	-	-
	Total	**20.19**	**0.00**	**0.00**

D) Deposit Scheme funded by IRCON

SN	Capitalisation	FY 2023-24 Estimated (Rs. in Crs.)	FY 2024-25 Projected (Rs. in Crs.)
1	Behiating to Dibrugarh TL	26.09	-
2	Nazira to Nazira TL		
3	Namrup to Naharkatiya TL		

SN	Capitalisation	FY 2023-24 Estimated (Rs. in Crs.)	FY 2024-25 Projected (Rs. in Crs.)
4	Golaghat to Furkating TL		
5	Diphu to Dhansiri TL		
6	Karimganj to Baraigram TL		
7	Pailapool to Sribar TL		
8	Panchgram to Badarpur TL		
9	Durlavchera to Ramnathpur TL		
10	Gauripur to Golakganj TL		
11	132kV bay at Panchgram GSS	-	1.61
12	132kV bay atGolaghat GSS	-	2.99
13	132kV bay at Diphu GSS	-	
14	220kV bay at Namrup GSS	2.77	-
15	132kV bay at Karimganj GSS and Pailapool GSS	2.99	-
16	132kV bay at Nazira GSS and behiating GSS	3.78	-
17	132kV bay at Dullavcherra GSS	-	-
18	Construction of Quarter, Boundary Wall & Installation, testing and commissioning of ODEX (Deep Well) along with all other associated works at 132 kV GSS, Diphu	-	-
19	Construction of Boundary wall, Sub-station Main Gate, Security Booth, RCC Drain, Culvert, Security Fencing, Quarter (Type- B, C1 &; V) &; Construction of new Pavement Block Road along with all other associated works at 132kV GSS, AEGCL, Golaghat	-	-
20	Additional works for construction of one no. of 132 KV Railway traction bay at 132 KV GSS Behiating	-	-
	Total	**35.63**	**4.60**

3. Deposit Scheme funded by APDCL

APDCL is requesting AEGCL for 33kV feeders in various locations. AEGCL under deposit scheme has taken up following projects.

SN	Capitalisation	FY 2022-23 Actual (Rs. in Crs.)	FY 2023-24 Estimated (Rs. in Crs.)	FY 2024-25 Projected (Rs. in Crs.)
1	Construction of 33kV feeder bay for Bishnupur - Panchallibay at Hatigarh(Dhemaji) GSS	0.51	-	-
2	Construction of 33kV Hojai bay feeder at Samaguri GSS	0.49	-	-
3	Construction of 33kV bay equipment for 33/11 kV Karimganj (Subhash Nagar) feeder bay to be constructed at Panchgarm GSS	0.46		-

SN	Capitalisation	FY 2022-23 Actual (Rs. in Crs.)	FY 2023-24 Estimated (Rs. in Crs.)	FY 2024-25 Projected (Rs. in Crs.)
4	Construction of 33 KV Dhubri Medical College Bay at 132 KV Gosaigaon GSS		0.72	
5	Construction of 33 KV Gunjung feeder at Haflong GSS		0.28	
6	Construction of 33 KV IT Park feeder at Kukurmara GSS		0.9	
7	Construction of 33 KV Nalbari Medical Bay at 132 KV Nalbari GSS and 33 KV Kokrajhar Medical Bay at 132 KV Kokrajhar GSS			1.47
8	Construction of 33 KV Nagaon Medical College Bay at 132 KV Khaloigaon GSS			0.79
9	Construction of 33kV Kukurmara-Rani Feeder at 400kV Kukurmara GSS			0.87
10	Construction of 2 No of 33 KV Bays for APDCL at Namrup GSS	-	1.07	-
	Total	**1.46**	**2.97**	**3.13**

4. Deposit Scheme funded by various entities

SN	Capitalisation	FY 2022-23 Actual (Rs. in Crs.)	FY 2023-24 Estimated (Rs. in Crs.)	FY 2024-25 Projected (Rs. in Crs.)
1	Construction of 33kV bay at 400kV Kukurmara GSS	0.45	0.12	-
2	Construction of North Lakhimpur Medical college Feeder bay at 132 kV Nalkata GSS	0.62	-	-
3	Turnkey Construction of 33 kV Feeder bay for Assam Hills Medical College and Research Institute at 132 kV Diphu GSS	0.61	-	-
4	Turnkey Construction of 33 kV Feeder bay for CIT at 132 kV Kokrajhar GSS	0.49	-	-
5	Turnkey Construction of 33 kV dedicated Feeder bay at 132 kV Umrangso GSS for 2nd Lower Kopili HEP of APGCL	-	0.49	-
6	Upgradation of existing 132 kV & 33 kV Main Bus Bar with ACCC Drake HTLS conductor at 220/132/22 kV Samaguri and 132/33 kV Dhaligaon GSS	1.14	-	-
7	Construction of 2 No of 33 KV Bays for APGCL at Namrup GSS	-	-	1.10
8	Construction of 2 No of 33 KV Bays for BVFCL at Namrup GSS	-	-	1.38

SN	Capitalisation	FY 2022-23 Actual (Rs. in Crs.)	FY 2023-24 Estimated (Rs. in Crs.)	FY 2024-25 Projected (Rs. in Crs.)
9	Shifting of the 132 KV D/C Jorhat - Mariani TL at Loc No 21B to 28A on turnkey basis	-	-	2.25
	Total	**3.31**	**0.61**	**4.73**

Funding of Deposit Work

Sr	Capitalisation	Funding Pattern (%)	FY 2022-23 (Rs. in Crs.)	FY 2023-24 (Rs. in Crs.)	FY 2024-25 (Rs. in Crs.)
A	GoA-Grant	100%	38.72	38.78	57.72
	Total	**100%**	**38.72**	**38.78**	**57.72**

10. North Eastern Special Infrastructure Development Scheme (NESIDS)

The proposal for "Construction of 2x50 MVA, 132/33 kV GIS Substation at the existing switchyard of 220/132 kV Amingaon GIS" was started by AEGCL under NESIDS scheme after getting sanction from GoA. The proposal was to construct the downstream network of 220/32kV Amingoan GIS (under NERPSIP).

The construction of downstream network of Amingaon GIS will boost the power quality & reduce transmission loss. Moreover, this will also help in catering the rapid increase in industrial load in the nearby area.

The project has already been awarded with completion period of 2 years.

Present Status of Works:

SN	Scheme Name	Project Name	Status	Start Date of Project	Original Date of Completion	Board Approved Cost (in INR)
1	North Eastern Special Infrastructure Development Scheme (NESIDS)	Turnkey Construction of 2x50 MVA, 132/33kV GIS (Gas Insulated Substation) at Existing 220/132kV Amingaon GIS	Drawing and designing under progress	23.08.2023	22.08.2025	Board Approved Cost is Rs. 37.68 Cr. NESIDS- Rs. 30.00 Cr Internal Source of AEGCL- 7.68

Summary of NESIDS Projects Capex & Capitalisation is tabulated below:

SN	Particulars	Estimated Capital Expenditure	Projected Capital Expenditure
		FY 2023-24	FY 2024-25
		(Rs. in Crs.)	(Rs. in Crs.)
1	Turnkey Construction of 2x50 MVA, 132/33kV GIS (Gas Insulated Substation) at Existing 220/132kV Amingaon GIS	5.00	25.00
	Total	**5.00**	**25.00**

SN	Particulars	Estimated Capitalisation	Projected Capitalisation
		FY 2023-24	FY 2024-25
		(Rs. in Crs.)	(Rs. in Crs.)
1	Turnkey Construction of 2x50 MVA, 132/33kV GIS (Gas Insulated Substation) at Existing 220/132kV Amingaon GIS	-	1.32
	Total	**0.00**	**1.32**

Funding of NESIDS Projects

Sr	Capital Expenditure	Funding Pattern	FY 2023-24	FY 2024-25
			(Rs. in Crs.)	(Rs. in Crs.)
A	GoI- Grant	100%	5.00	25.00
	Total	**100%**	**5.00**	**25.00**

Sr	Capitalisation	Funding Pattern	FY 2023-24	FY 2024-25
			(Rs. in Crs.)	(Rs. in Crs.)
A	GoI- Grant	100%	0.00	1.32
	Total	**100%**	**0.00**	**1.32**

11. North Eastern Council (NEC)

With increasing load demand in the area covered by 33 kV substations, the existing system was considered inadequate. Therefore, to strengthen the entire transmission system, for augmentation of transformation capacity for meeting the increased load demand at 220kV Salakati GSS, 220/132kV, 160 MVA Transformer was purchased and commissioned on 10th July 2021.

132/33kV Umrangshu GSS was constructed under NEC. Further the associated civil works such as RE Quarters, Officers Hostel, Staff Hostel were constructed and capitalised on FY 2022-23.

Capitalisation of NEC Projects is tabulated below:

Sr	Particulars	Actual Capitalisation FY 2022-23 (Rs. in Crs.)
1	Construction of 132/33 KV Umrangshu GSS	0.02
	Total	**0.02**

Funding of NEC Projects

Sr	Capitalisation	Funding Pattern	FY 2022-23 (Rs. in Crs.)
A	GoA-Grant	100%	0.02
	Total	**100%**	**0.02**

12. Internal Accrual Equity

AEGCL has made this capital expenditure out of its internal resources. As such the funding has been shown as internal equity.

1. 220kV Bay construction at Balipara end (PGCIL)

The second circuit of the 220kV Sonabil-Balipara (PGCIL) transmission line has been operationalized by AEGCL with completion of construction of terminal bay at Balipara Substation (PGCIL) is completed. The power supply position at Sonabil substation and AEGCL's 220kV Samaguri GSS, as well as all related downstream networks, will be more reliable and secure with commissioning of the became said line.

2. Supply, erection and commissioning of battery bank and battery charger for Lower, Central & Upper Assam Region in AEGCL

After the analysis of the untoward incident of 220 kV Samaguri Substation that took place on 17th September, 2020, emphasis was put on regarding the presence of dual DC source in the substations. In this regard, letter was received on 08.04.2021 from the DGM, Bongaigaon T&T Circle, AEGCL, Dhaligaon requesting for arrangement of a redundant DC source at 132 kV Kokrajhar GSS and 132 Bilasipara GSS by commissioning 01 set of 110V Battery Bank & Battery Charger at both the substations on an urgency basis. This is due to the fact that 132 kV Kokrajhar GSS and 132 kV Bilasipara GSS was equipped with only 01 set of 110V Battery Charger and Battery Bank. As stated, a single DC source for the grid substations is undesirable and availability of a redundant DC source is deemed necessary for smooth operation of the substation. Also, the substations were not considered for PSDF scheme (Phase-I).

Requirement was received from the DGM, LA T &T Circle stating that the battery bank and battery charger present at Sishugram substation are very old and problematic (manufacturing year being 1992) and the same needs to be replaced at the earliest. Also, as stated, battery bank no 02 present at Jawaharnagar GIS was not working. Proposals for new 220/110 V battery bank and charger were received for many sites under GTD, Sarusajai Division, Rangia Division and Kahilipara Division. Additionally, requirement was received from the DGM, 400KV Kukurmara (Mirza) GSS, proposing for new 220/110 V Battery bank and charger at 220KV Boko GSS, 132 kV Azara GSS, 132 kV Matia GSS, 132 kV APM GSS and 220 kV Agia GSS.

The following substations under jurisdiction of CAR had only one available healthy D.C. source:

i) 132/33 kV Dhekiajuli GSS (110 DC)
ii) 132/33 kV Ghoramari GSS (110V DC)
iii) 132/33 kV Haflong GSS (110 V DC)
iv) 132/33 kV Srikona GSS (110V DC)
v) 132/33 kV Pailapool GSS (110V DC)
vi) 220/132 kV Sonabil GSS (220V DC)

For smooth and safe operation of the Control System, dual DC source is most essential. Considering the above, an estimate was prepared for procurement and installation of battery bank & battery charger for six number of substation as per requirement. Requirement of 2nd source D.C System in many GSS of UAR under Dibrugarh T&T Circle, Lakhimpur T&T Circle and Jorhat T&T Circle was received from the GM, UA, T&T Zone vide letter dated 19.03.2021.

As per the decision on Samaguri Day held on 17th March, 2021, viewing the urgency, an estimate was prepared for procurement and installation of battery bank, battery charger and DCDB at the sites as per requirement. The proposal for purchase was approved from AEGCL's own source. Accordingly, tendering for "Supply, erection and commissioning of battery bank and battery charger for Lower, Central &Upper Assam Region in AEGCL" was done. Single stage two envelope bidding system was adopted for the procurement. Tender was invited through e-tendering portal assamtenders.gov.in.

3. **Supply of clamps, connectors, and hardware fittings for Central, Upper and Lower Assam Region in AEGCL**

   Clamps, connectors, and hardware fittings are basic requirements for daily operation and maintenance in a substation. Considering the same, estimate was prepared for supply of clamps, connectors, and hardware fittings at LAR, CAR & UAR sites as per field requirement. The proposal for purchase was approved from AEGCL's own source. Accordingly, tendering for "Supply of clamps, connectors and hardware fittings for Lower Assam Region in AEGCL" was done. Single stage two envelope bidding system was adopted for the procurement. Tender was invited through e-tendering portal assamtenders.gov.in.

4. **Provision for Furniture**

   AEGCL's main office and field offices are in need of new office furniture. Improvements to the aesthetics of field offices, which now lack many of these basic features, would necessitate a large expenditure.

5. **Provision for Office & Communication Equipment**

   There is a requirement for the acquisition of office equipment for essential requirements. These include printers, office supplies, and communication equipment that have been on hold for a long time.

6. **Provision for Civil & Other Miscellaneous Works**

   There is a requirement for renovation of AEGCL buildings, other buildings (residential colonies, Schools, hospitals etc.,) and road works at several offices, AEGCL has carried out these works from its internal accrual equity.

7. **Supply of Power & Control Cables and Related Services**

   To complete the work "Supply, Erection, Testing and Commissioning of Control and Relay Panel (CRP), Bay Control Unit (BCU) and Substation Automation System (SAS) for 08 (Eight) nos. of

Substations in AEGCL" under PSDF Scheme, procurement of Control and Power cables was necessary on emergency basis as per site requirement. Accordingly, after obtaining necessary board approval, two nos. of contracts were awarded to M/s KEI Industries Pvt. Ltd. for procurement of required power and control cables for 08 nos. of substations as mentioned below:

SN	Name of Work	Name of S/s	Contract Value (in Rs.)
1	Supply of Power & Control Cables and Related Services of 1.1 kV Class for Various Substations in Assam (Package-A)	Agia, Boko, Sishugram and Rangia GSS	1,33,32,331.00
2	Supply of Power & Control Cables and Related Services of 1.1 kV Class for Various Substations in Assam (Package-B)	Nazira, Bokajan, Mariani and Jorhat GSS	3,32,00,202.00

Summary of Own Source Projects and Capitalisation is tabulated below:

SN	Capital Expenditure	FY 2022-23 Actual (Rs. in Crs.)	FY 2023-24 Estimated (Rs. in Crs.)
1	Turnkey Construction of 220 kV Bay at Balipara Substation of Power Grid for termination of 2nd Circuit of 220 kV Balipara Sonabil -II	0.61	0.08
2	Supply, erection and commissioning of battery bank and battery charger for Central Assam Region in AEGCL	0.47	0.00
3	Supply, erection and commissioning of battery bank and battery charger for Upper Assam Region in AEGCL	0.24	0.00
4	Supply, erection and commissioning of battery bank and battery charger for Lower Assam Region in AEGCL	0.22	0.01
5	Supply of clamps, connectors and hardware fittings for Central Assam Region in AEGCL	0.20	0.21
6	Supply of clamps, connectors and hardware fittings for Upper Assam Region in AEGCL	0.59	0.00
7	Supply of clamps, connectors and hardware fittings for Lower Assam Region in AEGCL	0.55	0.19
8	Supply of Power & Control Cables and Related Services of 1.1 kV Class for Various Substations in Assam (Package-A)	0.00	1.33
9	Supply of Power & Control Cables and Related Services of 1.1 kV Class for Various Substations in Assam (Package-B)	0.00	3.32
	Total	**2.88**	**5.14**

Sr	Capitalisation	FY 2022-23 Actual (Rs. in Crs.)	FY 2023-24 Estimated (Rs. in Crs.)
1	Turnkey Construction of 220 kV Bay at Balipara Substation of Power Grid for termination of 2nd Circuit of 220 kV Balipara Sonabil -II	0.00	2.68
2	Supply, erection and commissioning of battery bank and battery charger for Central Assam Region in AEGCL	0.47	0.00
3	Supply, erection and commissioning of battery bank and battery charger for Upper Assam Region in AEGCL	1.00	0.24
4	Supply, erection and commissioning of battery bank and battery charger for Lower Assam Region in AEGCL	1.16	0.23
5	Supply of clamps, connectors and hardware fittings for Central Assam Region in AEGCL	0.00	0.40
6	Supply of clamps, connectors and hardware fittings for Upper Assam Region in AEGCL	0.00	0.59
7	Supply of clamps, connectors and hardware fittings for Lower Assam Region in AEGCL	0.45	0.28
8	Supply of Power & Control Cables and Related Services of 1.1 kV Class for Various Substations in Assam (Package-A)	0.00	1.33
9	Supply of Power & Control Cables and Related Services of 1.1 kV Class for Various Substations in Assam (Package-B)	0.00	3.32
10	Works relating to Building containing Transmission installations, Office buildings, Other buildings (Residential colony, School, Hospital, recreation club, etc.), Roads at UAR	0.65	0.00
11	Works relating to Miscellaneous Civil Works (including Hydraulic Works like Plant & Pipe line for water supply in residential colony) at UAR	0.46	0.00
12	Works relating to Transformers, LA, other misc. equipment at UAR	0.39	0.00
13	Works relating to Other plant & equipment (transformer kiosks, sub-station equipment & other fixed apparatus) for transmission at UAR	2.97	0.00
14	Works relating to Air-conditioning Plant static/Portable, Meter- testing laboratory tools & equipment, other tools and tackles at UAR	0.26	0.00
15	Works relating to Over-head lines (towers, poles, fixtures, overhead conductors and devices)-lines on fabricated steel support	0.14	0.00

Sr	Capitalisation	FY 2022-23 Actual (Rs. in Crs.)	FY 2023-24 Estimated (Rs. in Crs.)
	operating at a nominal voltage higher than 66Kv at UAR		
16	Works relating to Furnitures and Fixtures, Electrical wiring, light and fan installations, S/S works, Computers and accessories at UAR	0.33	0.00
17	Works relating to Telephone and EPABX, Refrigerators & Water Coolers, other office equipment at UAR	0.06	0.00
18	Works relating to Other buildings (Residential colony, School, Hospital, recreation club, etc.), Miscellaneous Civil Works (including Hydraulic Works like Plant & Pipe line for water supply in residential colony) at CAR	0.71	0.00
19	Works relating to Air-conditioning Plant static, Refrigerators & water coolers, Meter-testing laboratory tools & equipment, Other miscellaneous S/S equipment at CAR	0.08	0.00
20	Works relating to Metering Equipment, Oher Vehicles, Furnitures, Computers and Accessories, Other office equipment at CAR	0.40	0.00
21	Works relating to Building containing Transmission installations, Office buildings, Other buildings (Residential colony, School, Hospital, recreation club, etc.), Roads at LAR	0.20	0.00
22	Works relating to Miscellaneous Civil Works (including Hydraulic Works like Plant & Pipe line for water supply in residential colony) at LAR	1.06	0.00
23	Works relating to other misc. equipment, Other plant & equipment (transformer kiosks, sub-station equipment & other fixed apparatus) for transmission at LAR	0.30	0.00
24	Works relating to Air-conditioning Plant static/Portable, Meter- testing laboratory tools & equipment, other tools and tackles at LAR	0.31	0.00
25	Works relating to Over-head lines (towers, poles, fixtures, overhead conductors and devices)-lines on fabricated steel support operating at a nominal voltage higher than 66Kv at LAR	0.79	0.00
26	Works relating to Furnitures and Fixtures, Electrical wiring, light and fan installations, S/S works, Computers and accessories at LAR	0.12	0.00

Sr	Capitalisation	FY 2022-23 Actual (Rs. in Crs.)	FY 2023-24 Estimated (Rs. in Crs.)
27	Works relating to Telephone and EPABX, Refrigerators & Water Coolers, other office equipment at LAR	0.15	0.00
28	Works relating to Office buildings, Air-conditioning Plant static, misc. equipment, Computers and Accessories under DGM Civil	0.51	0.00
29	Works relating to Air-conditioning Plant static, tools and tackles, furniture, Electrical wiring, light and fan installations, Computers and Accessories, other office equipment under SLDC Subsidiary	0.17	0.00
30	Works relating to Air-conditioning Plant-portable, Furniture and Fixtures, Electrical wiring, light and fan installations, Computers and Accessories, other office equipment under Corporate AEGCL	0.46	0.00
	Total	**13.61**	**9.07**

Funding of Internal Accrual Equity

Sr	Capital Expenditure	Funding Pattern (%)	FY 2022-23 (Rs. in Crs.)	FY 2023-24 (Rs. in Crs.)
A	AEGCL- Internal Equity	100%	2.87	5.13
	Total	**100%**	**2.87**	**5.13**

Sr	Capitalisation	Funding Pattern (%)	FY 2022-23 (Rs. in Crs.)	FY 2023-24 (Rs. in Crs.)
A	AEGCL- Internal Equity	100%	13.61	9.07
	Total	**100%**	**13.61**	**9.07**

13. PM Gati Sakti Scheme

Under PM Gati Shakti Scheme, Procurement of Simulation and Design Software including hardware approved for AEGCL with an amount of Rs. 2.00 crores. Out of this, an amount Rs. 1,30,84,281.00/- has already been utilized. The simulation & Design software and hardware which are procured under the scheme are given below

i) PLS-CADD Standard+ FE(SAPS) software
ii) PLS-Tower software
iii) Autodesk Auto CAD Design, Architecture, Engineering and Construction software
iv) Supply of Bently's Staad Pro & Staad Foundation Advanced software
v) Laptop and Desktop
vi) Visual Projection System

For the rest of amount, Tender related work is under process for procurement of PSS@E software.

Present Status of Works:

Scheme Name	Sl. No.	Project Name	Start Date of Project	Target Date of Completion	Status as on 30.10.2023
Project under Part-II (PM Gati Shakti related Expenditure) of "Scheme for special assistance to states for capital investment for 2022-23")	1	Supply of Laptop and Desktop at O/o the MD, AEGCL	22.03.2023	31.10.2023	Laptops and Desktops are procured and project is almost completed. Preparation of Utilization Certificate is under process.
	2	Supply and Installation of Visual Projection System at O/o the MD, AEGCL	22.03.2023	31.10.2023	Project is almost completed. Preparation of Utilization Certificate is under process
	3	Supply and Installation of Supply of Bentlev's Staad Pro & Staad Foundation Advanced software at Olo the MD, AEGCL	22.03.2023	31.10.2023	Project is almost completed. Preparation of Utilization Certificate is under process
	4	Supply and Installation of Autodesk AutoCAD Design Architecture	22.03.2023	31.10.2023	Project is almost completed. Preparation of Utilization Certificate is under process

Scheme Name	Sl. No.	Project Name	Start Date of Project	Target Date of Completion	Status as on 30.10.2023
		, Engineering & Construction software at O/o the MD, AEGCL			
	5	Supply and Installation of PLS-Tower software at O/o the MD, AEGCL	22.03.2023	31.10.2023	Project is almost completed. Preparation of Utilization Certificate is under process
	6	Supply and Installation of PLS-CADD Standard+ FE(SAPS)at O/o the MD, AEGCL	30.03.2023	31.10.2023	Project is almost completed. Preparation of Utilization Certificate is under process
	7	Supply of PSS@E software along with Maintenance and Support of the existing licenses	05.10.2023	31.10.2023	Tender is under process

Summary of PM GATI SAKTI Projects Capex is tabulated below:

SN	Particulars	Estimated Capital Expenditure FY 2023-24 (Rs. in Crs.)
1	Supply of Laptop and Desktop at O/o the MD, AEGCL	0.13
2	Supply and Installation of Visual Projection System at O/o the MD, AEGCL	0.15
3	Supply and Installation of Supply of Bentlev's Staad Pro & Staad Foundation Advanced software at Olo the MD, AEGCL	0.18
4	Supply and Installation of Autodesk AutoCAD Design Architecture, Engineering & Construction software at O/o the MD, AEGCL	0.17
5	Supply and Installation of PLS- Tower software at O/o the MD, AEGCL	0.16
6	Supply and Installation of PLS- CADD Standard+ FE(SAPS)at O/o the MD, AEGCL	0.52

7	Supply of PSS@E software along with Maintenance and Support of the existing licenses	0.69
	Total	**2.00**

Summary of PM GATI SAKTI Projects Capitalisation is tabulated below:

SN	Particulars	Projected Capitalisation FY 2024-25 (Rs. in Crs.)
1	Supply of Laptop and Desktop at O/o the MD, AEGCL	0.13
2	Supply and Installation of Visual Projection System at O/o the MD, AEGCL	0.15
3	Supply and Installation of Supply of Bentlev's Staad Pro & Staad Foundation Advanced software at Olo the MD, AEGCL	0.18
4	Supply and Installation of Autodesk AutoCAD Design Architecture, Engineering & Construction software at O/o the MD, AEGCL	0.17
5	Supply and Installation of PLS- Tower software at O/o the MD, AEGCL	0.16
6	Supply and Installation of PLS- CADD Standard+ FE(SAPS)at O/o the MD, AEGCL	0.52
7	Supply of PSS@E software along with Maintenance and Support of the existing licenses	0.69
	Total	**2.00**

Funding of PM GATI SAKTI

Sr	Capital Expenditure	Funding Pattern (%)	FY 2023-24 (Rs. in Crs.)
A	GOI- Grant	100%	2.00
	Total	**100%**	**2.00**

Sr	Capitalisation	Funding Pattern (%)	FY 2024-25 (Rs. in Crs.)
A	GOI- Grant	100%	2.00
	Total	**100%**	**2.00**

Annexure – V(A)
NERPSIP Status Report

Status of Projects being executed by Power Grid under NERPSIP Scheme as on 27.10.2023

SL	Name of Substation	Associated Transmission Line	Status of the Projects yet to be handed over to AEGCL		Expected Completion
Status of work under progress:-					
1	220/132 kV Behaiating GSS (NECCON power & Infra Ltd.)		**Work-in-progress.** Switchyard PCC, Approach road, Gravelling etc., works in progress.		Nov-23
		220 kV D/C Tinsukia-Behiating TL (Power Mech Projects Ltd.)	**Completed** **Test charged on 10.10.2023** **Total Tower - 203, Stringing - 52.863 km, ROW issue** : Nil		Oct-23
			Foundation		
			Completed – **203 Nos**	Balance- **Nil**	
			Erection		
			Completed – **203 Nos**	Balance- **Nil**	
			Stringing		
			Completed - **52.863 km**	Balance- **Nil**	
2	132/33 kV Hajo GSS (NECCON power & Infra Ltd.)		**Test Charged on 19.10.2023** PCC, gravelling, Cable laying and termination, Transit camp etc works in progress.		Nov-23
		132 kV Amingaon - Hajo Line M/S KEC	**Test Charged on 19.10.2023** **Total Tower - 32, Stringing - 8.837 km**		Nov-23
			Foundation		
			Completed – **32 Nos**	Balance - **Nil**	
			Erection		
			Completed – **32 Nos**	Balance – **Nil**	
			Stringing		
			Completed - **8.837 km**	Balance – **Nil**	
3	220/132 kV Amingaon GIS (JV of Techno & Seiyuan)		**Back charged on 10.05.2023. Commmercially not loaded due to non completion of 220 kV Rangia-Amingaon TL**		Nov-23
		220 kV D/C Rangia – Amingaon TL (M/S KEC)	**Work-in-progress(Foundation, erection)** **Total Tower - 105,Stringing - 28.337 km** **ROW issue:** Nil		Nov-23
			Foundation		
			Completed –**105 Nos**	Balance – **Nil**	
			Erection		
			Completed – **105 Nos**	Balance – **Nil**	
			Stringing		
			Completed –**23.351 km**	Balance – **1.772 km**	
4	132/33KV GMCH GIS (JV of Techno & Seiyuan)		Minor civil and electrical works pending.		Nov-23
		132 kV GMCH-Kahilipara D/C UG cable (JV of Techno & Seiyuan)	**Work in progress** Total UG cable length: **6.6 km** Cable laid: **1.6 km(Lower Portion - Out of 1.6km) and 3.458 km (Upper portion - Out of 4 km)**		Nov-23
5	132/33KV Paltanbazar GIS (JV of Techno & Seiyuan)		**Work in progress** **Pending minor works against** 2nd Transformer (under the scope of AEGCL) to be taken up after completion of associated TL.		Nov-23
		132 kV Paltanbazar-Kamakhya UG cable (JV of Techno & Seiyuan)	**Work in progress** **Total UG cable length: 4.5 km** Out of 2 Nos Tower works, Erection works of 1 Nos Tower and stringing works in Lower portion near Kamakhya GSS in progress. Another 3 Nos JB works are in progress due to damage of cable (Caused by Guwahati Smart City Ltd.).		Nov-23
			Total UG cable length:	**4.5 km**	
			Cable laying complete:	**3.88 km**	
			Balance	**0.62 km**	

SL	Name of Substation	Associated Transmission Line	Status of the Projects yet to be handed over to AEGCL	Expected Completion
Status of Commercially Loaded Grid Substations:-				
6	132/33 kV Silapathar GSS (NECCON power & Infra Ltd.)		**Commissioned successfully on 25.03.2023** ****Civil works such as Sanitary, Kitchen works, Drain construction works etc are pending	-
		132 kV Dhemaji-Silapathar TL (Teems India Towerlines Private Ltd.)	Line Complete and **test charge completed 25.07.2022** Total Tower - 123, Stringing - 35.88 km	-
7	132/33 kV Chapakhowa GSS (NECCON power & Infra Ltd.)		**Commissioned successfully on 04.10.2021.** ****Civil works such as Sanitary, Kitchen works, Drain construction works etc are pending*	-
		132 kV Rupai-Chapkhowa TL (Power Mech Projects Ltd.)	**Commissioned successfully on 11.06.2021.**	-
8	132/33 kV Teok GSS (NECCON power & Infra Ltd.)		**Commissioned successfully on 07.06.2021.** ****Civil works such as Sanitary, Kitchen works, Drain construction works etc are pending*	-
		LILO of 132 kV Jorhat-Nazira at Teok (Simplex was terminated & Power Mech Projects Ltd was engaged)	**Commissioned successfully on 07.06.2021.**	-
9	132/33 kV Sarupathar GSS (NECCON power & Infra Ltd.)		**Commissioned successfully on 02.05.2022.** ****Civil works such as Sanitary, Kitchen works, Drain construction works etc are pending*	-
		LILO of 132 kV Golaghat-Bokajan at Sarupathar GSS (Power Mech Projects Ltd)	**Commissioned successfully on 11.09.2021**	-
10	132/33KV Tangla GSS (NECCON power & Infra Ltd.)		**Commissioned on 08.06.2022.** Transit camp, Control room building, etc works are in progress.	-
		LILO of Rangia-Rowta TL at Tangla (M/S KEC)	**Line Charged on 29.05.2022 and commercially loaded on 19.06.2022** **Total Tower - 40, Stringing - 10.658 km**	-
11	132/33KV Tezpur GSS (NECCON power & Infra Ltd.)		**Commissioned on 07.01.2023** Minor civil and electrical works,	-
		132kV D/C Sonabil-Tezpur TL (M/S KEC)	**Line test charge on 06.08.2022 and commissioned on 07.01.2023** Total Tower - **63 Nos**, Stringing - **16.081 km**	-
12		LILO of 132 kV Kamalpur – Sishugram TL and Kamalpur – Kamakhya TL at Amingaon (M/S KEC)	**Test charged on 04.03.2023 and is in operation** **Total Tower(MCkt:23,DC:8) - 31, Stringing - 9.528 km** **ROW issue:** Nil *Foundation* Completed – **31 Nos** / Balance – **Nil** *Erection* Completed – **31 Nos** / Balance – **Nil** *Stringing* Completed –**9.528 km** / Balance – **Nil**	-

****** Work order awarded to M/s EPIL for construction of township under NERPSIP**

OPGW Works under NERPSIP scheme			
Sl No	**Name of Line**	**Line Length (in km)**	**Status**
1	132 KV Dhemaji- North Lakhimpur TL	60	Completed
2	132 KV North Lakhimpur-Gohpur existing TL	71	Completed
3	132 kV Rowta-Rangia line	108	Completed but not commissioned
4	132 kV Bokajan-Golaghat line	66	Completed
5	132 kV Golaghat-Mariani line	45	Completed
6	132 kV Mariani-Jorhat line	20	Completed
7	132 kV Jorhat-Nazira line	22	Completed
8	132 kV Sankardevnagar-Samaguri line	60	Completed
9	132 kV Rupai-Tinsukia line	31	Completed
10	132 kV LILO of Rangia-Kahilipara at Kamakhya line	5	Work in progress
11	132 kV LILO of Rangia-Kahilipara at Kamalpur line	5	Work in progress
12	220 kV Sonabil-Balipara line	28	Completed
	TOTAL considering additional 7% length	548 km	

Progress of Extension & Augmentation of Existing EHV substations under NERPSIP scheme

SL	Substation	Percentage Completeion	Remarks
1	220/132 /33 kV Samaguri augmentation SS 2X160 MVA 1x50 MVA	80%	**Commissioned on 12.06.2020** **Pending works** (1)Automatic false alarm and operation of HVW spray system (2) Lighting and illumination works pending. (3) Some civil and electrical works pending (4)SAS integration works pending (5) Cable trench and slabs in the switchyard that were damaged were not repaired. (6) FFPH and NIFPS works pending. (7) DG set not alloted. (8)Complete mandatory spares as per BoQ of NERPSIP not handed over till date.
2	132/33 kV Dhaligaon augmentation SS 2x50MVA	80%	**Commissioned on 03.10.2020** **Pending works** (1) ACDB and DCDB works pending (2) PCC works of 33 kV side isolator surrounding area pending. (3) Illumination works pending (4) FFPH works pending. (5) Complete mandatory spares as per BoQ of NERPSIP not handed over till date.
3	132/33 kV Dhemaji GSS Bay extension	85%	**Line bay commissioned on 27.03.2019** **Pending works** (1) Supply of some Mandatory spares (2) Some Civil & Electrical works pending (3) Illumination works pending. (4)DG set commissioning pending.
4	220/132 kV Sonabil Bay Extension	97%	**Both the bays commissioned on 29.03.2019** **Pending works** (1) Supply of some Mandatory spares
5	132/33 kV Rupai GSS Bay Extension	80%	**Commisssioned on 30.09.2020** **Pending works** (1) DG set commissioning. (2) Fencing works. (3) Drain works. (4) Gravelling works.
6	220 kV Tinsukia Bay extension	70%	**Pending works** (1) Panel commissioning (2) Cable laying (3)Illumination Testing & Commisionig
7	Bay Extension of 220 kV Rangia GSS	95%	**Commissioned on 06.03.2019** **Pending Works** Minor civil and electrical works in progress
8	Bay Extension of 132/33 kV Kahilipara GSS	95%	**Commissioned on 30.04.2019** **Pending works** (1)SAS integration works pending. (2) Minor control and relay panel works pending.
9	Extension of 132/33 kV Kamakhya GIS	100%	Spare bay of AEGCL located at Kamakhya SS will be utilized. Only cable termination is the scope and has been completed.

Annexure – VI
Conversion of Government Grants & Loans into Equity for FY 2022-23

GOVERNMENT OF ASSAM
POWER (ELECTRICITY) DEPARTMENT
DISPUR GUWAHATI##06

No. PEL.58/2021/Pt./105 **Dated Dispur the 3rd February, 2022.**

From : F.R. Laskar,ACS,
Joint Secretary to the Govt. of Assam,
Power (Elect.) Department.

To : The Managing Director,AEGCL,
Bijulee Bhawan, Paltanbazar,
Guwahati-01.

Sub : Regarding Decision of Hon'ble Cabinet meeting held on 24/12/2021.

Sir,

With reference to the subject cited above, I am directed to inform you that, the Hon'ble Cabinet in its meeting held on 24-12-2021 approved the proposal of AEGCL for "Conversion of Government Loan and Grant to AEGCL into Equity and 2.Waiver of interest Accrued on Loan, as on 31.03.2021".

You are therefore requested to take necessary action for compliance to the decision of Hon'ble Cabinet.

Yours faithfully,

Joint Secretary to the Govt. of Assam,
Power Elect.) Department.

Memo. No. PEL.58/2021/Pt./105-A, **Dated Dispur the 3rd February, 2022.**

Copy to:-

P.S.to Principal Secretary , Power (E.) Department, for kind information.

By order etc.,

Joint Secretary to the Govt. of Assam,
Power (Elect.) Department.

Scanned with Oken Scanner

FINANCIAL SANCTION

सत्यमेव जयते

Government Of Assam

Power (Electricity) Department

Sanction No: FS/42_2021-22(I)_07

Sanction Date: 31-12-2021

To,

Accountant General (A&E) Assam, Maidamgaon, Beltola, Guwahati-29

PURPOSE/SCHEME	CONVERSION OF GOVERNMENT GRANTS TO AEGCL INTO EQUITY (AS ON 31.03.2021) BOOK ADJUSTMENT ONLY

Proposal No. : FS-42-2021-22-00008

Administrative Approval : Not Applicable

Dept. File No : PEL.58/2021/Pt-II

Financial Year : 2021-22

Finance Concurrence No : -N/A-

Sanctioned to : DIS/SAD/001 , SA(Accounts)Dept.

Sanctioned by: F R LASKAR, JT SECRETARY

HOA : 4801-80-190-2063-501-20-99-SOPD-ODS-V-GA

Issued under DFP Rules:

Financial Sanction of the competent authority is hereby accorded for an amount not exceeding **Rs.195505.00000 Lakhs (Rupees One Thousand Nine Hundred and Fifty Five Crore Five Lakh only)** towards the payment subject to the following terms and conditions:

TERMS & CONDITIONS

1. All norms in Assam Financial Rules, AFRBM Act 2005, CVC Guidelines, Assam Public Procurement Act 2017, Assam Public Procurement Rules 2021 and similar directives from Finance Department issued from time to time is to be strictly followed invariably.
2. The admissible deductions can be deducted and deposited into the Govt. Account by the Concerned Authority as per rule/ Govt. Instructions.
3. Work to be completed within the estimated cost in all respect without involving cost and time over run.

BENEFICIARY DETAILS

#	Name	Account Number	Amount (In Lakhs)	Remarks
1	Assam Electricity Grid Corporation Ltd	10566984188	195505.00000	BOOK ADJUSTMENT ONLY

COPY FORWARDED TO

1. The Accountant General (A&E) Assam, Maidamgaon, Beltola, Guwahati-29.
2. The Accountant General (Audit), Assam, Maidamgaon, Guwahati-29
3. The Power (Electricity) Department, Assam.
4. Finance (EC-I/II/III) Dept.
5. Finance (Budget) Dept.
6. SA(Accounts)Dept.
7. Treasury Officer, Dispur

This is a computer generated document and doesn't require any Signature/Seal

FINANCIAL SANCTION

सत्यमेव जयते

Government Of Assam

Power (Electricity) Department

Sanction No: FS/42_2021-22(I)_08

Sanction Date: 31-12-2021

To,

Accountant General (A&E) Assam, Maidamgaon, Beltola, Guwahati-29

PURPOSE/SCHEME	Conversion of Govt. Loan to AEGCL into Equity (as on 31.03.2021) Book Adjustment Only

Proposal No. : FS-42-2021-22-00007

Administrative Approval : Not Applicable

Dept. File No : PEL.58/2021/Pt-II

Financial Year : 2021-22

Finance Concurrence No : -N/A-

Sanctioned to : DIS/SAD/001 , SA(Accounts)Dept.

Sanctioned by: F R LASKAR, JT SECRETARY

HOA : 4801-80-190-2063-501-20-99-SOPD-ODS-V-GA

Issued under DFP Rules:

Financial Sanction of the competent authority is hereby accorded for an amount not exceeding **Rs.63841.00000 Lakhs (Rupees Six Hundred and Thirty Eight Crore Forty One Lakh only)** towards the payment subject to the following terms and conditions:

TERMS & CONDITIONS

1. All norms in Assam Financial Rules, AFRBM Act 2005, CVC Guidelines, Assam Public Procurement Act 2017, Assam Public Procurement Rules 2021 and similar directives from Finance Department issued from time to time is to be strictly followed invariably.
2. The admissible deductions can be deducted and deposited into the Govt. Account by the Concerned Authority as per rule/ Govt. Instructions.
3. Work to be completed within the estimated cost in all respect without involving cost and time over run.

BENEFICIARY DETAILS

#	Name	Account Number	Amount (In Lakhs)	Remarks
1	Assam Electricity Grid Corporation Ltd	10566984188	63841.00000	BOOK ADJUSTMENT ONLY

COPY FORWARDED TO

1. The Accountant General (A&E) Assam, Maidamgaon, Beltola, Guwahati-29.
2. The Accountant General (Audit), Assam, Maidamgaon, Guwahati-29
3. The Power (Electricity) Department, Assam.
4. Finance (EC-I/II/III) Dept.
5. Finance (Budget) Dept.
6. SA(Accounts)Dept.
7. Treasury Officer, Dispur

This is a computer generated document and doesn't require any Signature/Seal

Annexure – VII
Transmission System Availability for FY 2022-23

TRANSMISSION SYSTEM AVAILABILITY FACTOR OF AEGCL

FY 2022-2023

MONTH	% AVAILABILITY
Apr-22	99.064
May-22	99.371
Jun-22	99.434
Jul-22	99.271
Aug-22	98.835
Sep-22	99.048
Oct-22	99.331
Nov-22	99.228
Dec-22	99.315
Jan-23	99.215
Feb-23	99.313
Mar-23	99.147
AVERAGE	99.214

*** Calculations done as per new formula notified by Honble AERC

PREPARED BY

6.4.2023

DEPUTY MANAGER (SYSTEM OPERATIONS)

SLDC, AEGCL

KAHILIPARA, GHY-19

SUBMITTED BY

ASSISTANT GENERAL MANAGER (SYSTEM OPERATIONS)

SLDC, AEGCL

KAHILIPARA, GHY-19

CHECKED BY

DEPUTY GENERAL MANAGER (OPERATIONS)

SLDC, AEGCL

KAHILIPARA, GHY-19

6.4.23

CHIEF GENERAL MANAGER

SLDC, AEGCL

KAHILIPARA, GHY-19

Statement showing monthwise incentive based on actual transmission availabilty

Sl. No	Month	No. of days in month	Annual transmission charge	Monthly transmission charges (in Rs)	Actual transmission availability (in %)	*Normative availability (in %)	Transmission charges inclusive of incentive (in Rs)	Incentive/ Unrecoverable TC (in Rs)	Formula applied
a	b	c	d	e=d X c/365	f	g	h=e X f / g	i = h -e	As per Clause-71.2 of AERC Regulation
1	April'22	30	4669600000	383802739.73	99.064	98.5	386000351.35	2197611.63	AFC x (NDM/NDY) x (TAFM/98.5%)
1	May'22	31	4669600000	396596164.38	99.371	98.5	400103121.33	3506956.95	AFC x (NDM/NDY) x (TAFM/98.5%)
1	June'22	30	4669600000	383802739.73	99.434	98.5	387442046.92	3639307.20	AFC x (NDM/NDY) x (TAFM/98.5%)
1	July'22	31	4669600000	396596164.38	99.271	98.5	399700485.63	3104321.25	AFC x (NDM/NDY) x (TAFM/98.5%)
1	August'22	31	4669600000	396596164.38	98.835	98.5	397944993.98	1348829.59	AFC x (NDM/NDY) x (TAFM/98.5%)
1	September'22	30	4669600000	383802739.73	99.048	98.5	385938007.76	2135268.03	AFC x (NDM/NDY) x (TAFM/98.5%)
1	October'22	31	4669600000	396596164.38	99.331	98.5	399942067.05	3345902.67	AFC x (NDM/NDY) x (TAFM/98.5%)
1	November'22	30	4669600000	383802739.73	99.228	98.5	386639373.17	2836633.45	AFC x (NDM/NDY) x (TAFM/98.5%)
1	December'22	31	4669600000	396596164.38	99.315	98.5	399877645.34	3281480.95	AFC x (NDM/NDY) x (TAFM/98.5%)
1	January'23	31	4669600000	396596164.38	99.215	98.5	399475009.64	2878845.25	AFC x (NDM/NDY) x (TAFM/98.5%)
1	February'23	28	4669600000	358215890.41	99.313	98.5	361172535.27	2956644.86	AFC x (NDM/NDY) x (TAFM/98.5%)
1	March'23	31	4669600000	396596164.38	99.147	98.5	399201217.36	2605052.98	AFC x (NDM/NDY) x (TAFM/98.5%)
	Total						4703436854.81	33836854.81	

K.Thakuria
Accounts Officer (Bill/Esstt)
Bijulee Bhawan

Annexure – VIII
New Grid Elements for FY 2023-24

NEW GRID ELEMENTS **YEAR: 2023-2024**

SL NO	ELEMENT	LOCATION	DATE OF CHARGING	TIME OF CHARGING	REMARKS
1	132 kV AGIA-HATSINGIMARI LINE	ASSAM	26.4.2023	14.00	FIRST TIME IDLE CHARGED
2	132/33KV 25 MVA TR AT BARPETA GSS	BARPETA	28.4.2023	14.07	FIRST TIME IDLE CHARGED
3	132/33KV , 50 MVA TRAFO-2 AT DEPOTA	DEPOTA	3.5.2023	22.21	FIRST TIME IDLE CHARGED
4	160 MVA TRANSFORMER 1	220KV AMINGAON GIS	10.5.2023	16.51	FIRST TIME CHARGED
5	160 MVA TRANSFORMER 2	220KV AMINGAON GIS	10.5.2023	17.01	FIRST TIME CHARGED
6	132KV AMINGAON KAMALPUR 1	220KV AMINGAON GIS	10.5.2023	14.17	FIRST TIME CHARGED
7	132KV AMINGAON KAMALPUR 2	220KV AMINGAON GIS	10.5.2023	14.30	FIRST TIME CHARGED
8	132KV AMINGAON AIIMS	220KV AMINGAON GIS	10.5.2023	15.33	FIRST TIME CHARGED
9	132KV AMINGAON SISUGRAM	220KV AMINGAON GIS	10.5.2023	15.01	FIRST TIME CHARGED
10	132KV NALKATA PARE BAY	NALKATA	10.5.2023	12.50	FIRST TIME CHARGED
11	132KV NALKATA NIRJULI BAY	NALKATA	10.5.2023	13.00	FIRST TIME CHARGED
12	132/33kV 50MVA TRAFO AT BARNAGAR	BARNAGAR	26.5.2023	14.27	FIRST TIME CHARGED
13	132/33kV 25MVA TRAFO AT HATSINGIMARI	HATSINGIMARI	27.5.2023	21.20	FIRST TIME CHARGED
14	132/33 kV 25 MVA TRAFO AT GOSSAIGAON	GOSSAIGAON	30.5.2023	23.08	FIRST TIME CHARGED
15	220kV BALIPARA BAY AT SONABIL	SONABIL	7.6.2023	14.47	FIRST TIME CHARGED
16	220kV SONABIL -BALIPARA-I &II	SONABIL	11.6.2023 &14.6.2023	22:00 & 19:07	CROSS JUMPERING AND REJUMPERING DONE AND BOTH LINES CHARGED
17	220kV MIRZA-SARUSAJAI-I	SARUSAJAI	15.6.2023	13.35	FIRST TIME CHARGED AFTER HTLS
18	220KV TINSUKIA-BIHIATING BAY-I	TINSUKIA	18.6.2023	15.52	FIRST TIME CHARGED
19	220KV TINSUKIA-BIHIATING BAY-II	TINSUKIA	18.6.2023	16.17	FIRST TIME CHARGED
20	220kV SARUSAJAI-MIRZA-II	SARUSAJAI	18.6.2023	19.11	FIRST TIME CHARGED AFTER HTLS
21	132/33kV 50MVA TRAFO AT DIBRUGARH	DIBRUGARH	27.6.2023	21.58	IDLE CHARGED
22	132/33kV 16MVA TRAFO AT HATSINGIMARI	HATSINGIMARI	11.7.2023	13.07	FIRST TIME CHARGED
23	12.5MVA BUS REACTOR AT MARIANI	MARIANI	14.7.2023	16.34	FTC (AFTER OUTAGE OF REACTOR EXCEEDING 6 MONTHS)
24	132/33 KV 50 MVA TX-2	SAMAGURI	20-07-2023	12.11	FIRST TIME CHARGED
25	132/33 KV 50 MVA TX-2	MIRZA	21.7.2023	11.47	FIRST TIME CHARGED (REPLACED 25MVA TX)
26	132 KV NALKATA NIRJULI	NALKATA	31.7.2023	23.20	FIRST TIME CHARGED
27	132KV NALKATA PARE	NALKATA	1.8.2023	20.43	FIRST TIME IDLE CHARGED
28	220kV AIS SUBSTATION AT STAR CEMENT LIMITED	SONAPUR	8.8.2023	0.00	FIRST TIME IDLE CHARGED
29	132/33kV 31.5MVA TX-I AT MORAN	MORAN	09.8.2023	23.55	FIRST TIME CHARGED
30	132KV GOHPUR BNC (PGCIL)	GOHPUR	11.8.2023	23.27	FIRST TIME IDLE CHARGED LOADED
31	132KV GOHPUR ITANAGAR	GOHPUR	12.8.2023	0.12	FIRST TIME IDLE CHARGED LOADED
32	220KV BUS COUPLER AT AGIA	AGIA	18.8.2023	9.19	FIRST TIME IDLE CHARGED
33	220/132kV 160MVA TR AT AGIA	AGIA	22.9.2023	14.39	FIRST TIME IDLE CHARGED
34	132/33kV 50MVA TR AT MIRZA	MIRZA	22.9.2023	22.07	FIRST TIME IDLE CHARGED
35	220/132kV 50MVA TR AT KHALOIGAON	KHALOIGAON	3.10.2023	0.21	FIRST TIME IDLE CHARGED
36	132kV PANCHGRAM-BADARPURGHAT (RLWY)	PANCHGRAM	5.10.2023	16.03	FIRST TIME CHARGED
37	219 kV TINSUKIA-BEHIATING-I	ASSAM	10.10.2023	15.16	FIRST TIME IDLE CHARGED
38	220 kV TINSUKIA-BEHIATING-II	ASSAM	10.10.2023	15.38	FIRST TIME IDLE CHARGED
39	132kV AMINGAON-HAJO-II	ASSAM	19.10.2023	21.06	FIRST TIME CHARGED
40	132kV AMINGAON-HAJO-I	ASSAM	19.10.2023	21.30	FIRST TIME CHARGED
41	132/33kV 31.5MVA TX-II AT HAJO	HAJO	19.10.2023	22.08	FIRST TIME CHARGED
42	132/33kV 31.5MVA TX-I AT HAJO	HAJO	19.10.2023	22.15	FIRST TIME CHARGED
43	132kV SONABIL-TEZPUR-I	ASSAM	21.10.2023	12.41	FIRST TIME CHARGED AFTER OUTAGE OF MORE THAN SIX MONTHS
44	132/33kV 40 MVA TX AT SIPAJHAR	SIPAJHAR	27.10.2023	16.33	FIRST TIME CHARGED

Annexure – IX
Energy Balance for FY 2023-24
Certified by SLDC

ASSAM ELECTRICITY GRID CORPORATION LTD.

Format for Energy Data FY 2023-24

Sl No.	Particulars	FY 2023-24 (H1) (Actual)	FY 2023-24 (H2) (Estimated)	FY 2023-24 (H1 + H2) (Estimated)
1	Energy injected (in MU)	7014.73	6029.19	13043.92
2	Energy sent out to APDCL (in MU)	6766.50	5810.92	12577.42
3	Enenrgy sent out to Inter State Open Access Consumers (in MU)	13.26	14.20	27.46
4	Enenrgy sent out to Intra State Open Access Consumers (in MU)	4.55	6.32	10.87
5	Total Energy Sent Out [(2)+(3)+(4)]	6784.31	5831.44	12615.75
6	Transmission Loss (in MU)[(1)-(5)]	230.42	197.75	428.17
7	Transmission Loss (in %)	3.28	3.28	3.28

Prepared by:

JM, MO
SLDC, AEGCL

DM, MO
SLDC, AEGCL

Checked by:

AGM, MO
SLDC, AEGCL

DGM, Operations
SLDC, AEGCL

Countersigned by:

CGM, SLDC
AEGCL

H1 is verified.

AGM, TRC
APDCL

Annexure – X
Estimated Expenditure for Cyber Security for FY 2023-24

CYBER SECURITY BUDGET 2023-24

H1				H2		
Sl No.	Particulars	Amount in Rs.		Sl No.	Particulars	Amount in Rs.
PAYMENT RELEASED					Managed Switches at AEGCL Sites	1600000
1	Purchase of Webmail Licenses and Space	593835		a	Managed Switches at AEGCL HQ	600000
ACCOUNT BOOKED PAYMENT TO BE MADE				b	LAN (Local Area Network Connection) for AEGCL Offices	700000
1	Training And Development Cyber Hygiene training program at NPTI	2500000		c	2 Firewalls at high availability mode for NMS at LA Communication AEGCL	2200000
2	Observation of NCSAM Mock Drill by M/s Prime Infoserv LLP	112100		d	70 Windows professional licenses Desktops	7000000
3	LAN (Local Area Network Connection) for AEGCL Offices	1778512		e	300 End Point Security Licenses	499500
4	LAN Connectivity set up at Transit Camp	148086				
5	End point Security Cloud Based (Antivirus)	962499.45				
6	Procurement of Managed switches over unmanaged switches	149860				
Total		**6244892.45**		**Total**		**12599500**

Annexure – XI
Conversion of Government Grants & Loans into Equity for FY 2023-24

I/279779/2023

GOVERNMENT OF ASSAM
POWER (ELECTRICITY) DEPARTMENT
DISPUR, GUWAHATI- 6

No. E 377979/4 Dated Dispur, the 15-09-2023

From: Shri Dulal Debnath, ACS
Joint Secretary to the Govt. of Assam
To: The MD, APGCL/ AEGCL
Bijuleebhawan, Paltanbazar, Guwahati- 01

Sub.: Decision of Hon'ble Cabinet in its meeting held on 08/09/2023- regarding.

Sir,
With reference to the subject cited above, I am directed to communicate the decision of Hon'ble Cabinet in its meeting held on 08/09/2023 on the matter of Conversion of Government of Assam Loans and Grants to APGCL and AEGCL into Equity as on 31.03.23, as communicated by Political (Cabinet Cell) Department.

The relevant extract of the minutes of the aforesaid Cabinet Meeting is reproduced below:
"Sub : 1) Conversion of Government of Assam Loans and Grants to APGCL into Equity as on 31.03.2023.
2) Conversion of Government of Assam Loans and Grants to AEGCL into Equity as on 31.03.2023 and waiver of interest accrued on such loans.
Approved.

Sd./-
Joint Secretary to the Government of Assam
Political (Cabinet Cell) Department
Dispur, Guwahati"

This is for favour of information and necessary action.

Yours faithfully,

Joint Secretary to the Govt. of Assam
Power (Electricity) Department

Memo No. E 377979/4-A Dated Dispur, the 15-09-2023
Copy to:
1. The Joint Secretary to the Government of Assam, Political (Cabinet Cell) Department, Dispur, Guwahati- 6.
2. PS to Secretary, Power (Electricity) Department, Dispur, Guwahati- 6

By order etc.,
e-signed
Joint Secretary to the Govt. of Assam
Power (Electricity) Department

FINANCIAL SANCTION

सत्यमेव जयते

Government Of Assam

Power (Electricity) Department

Sanction No: FS/pe_2023-24(I)_30

Sanction Date: 12-10-2023

To,

Accountant General (A&E) Assam, Maidamgaon, Beltola, Guwahati-29

PURPOSE/SCHEME	Conversion of Government of Assam Loans to AEGCL into Equity, as on 31.03.2023

Proposal No. : FS-pe-2023-24-00038

Administrative Approval : Not Applicable

Dept. File No : 388656

Financial Year : 2023-24

Grant No : 62

Finance Concurrence Remarks: N/A

Finance Concurrence No : -N/A-

Sanctioned to : DIS/SAD/001 , General Administration (Secretariat Accounts) Deptt.

Sanctioned by: Mr. Sanjib Sarma AFS,Senior Financial Advisor, Power (Electricity) Department

HOA : 4801-80-190-2063-501-20-99-SOPD-ODS-V-GA

DFP Rules: Cabinet approval dated 08/09/2023

Whether this work/scheme/program etc. has Forest Royalty due to the Government? : N/A

Financial Sanction of the competent authority is hereby accorded for an amount not exceeding **Rs.1151.70000 Lakhs (Rupees Eleven Crore Fifty One Lakh Seventy Thousand only)** towards the payment subject to the following terms and conditions:

TERMS & CONDITIONS

1. All norms in Assam Financial Rules, AFRBM Act 2005, CVC Guidelines, Assam Public Procurement Act 2017, Assam Public Procurement Rules 2021 and similar directives from Finance Department issued from time to time is to be strictly followed invariably.
2. The admissible deductions can be deducted and deposited into the Govt. Account by the Concerned Authority as per rule/ Govt. Instructions.
3. Work to be completed within the estimated cost in all respect without involving cost and time over run.

BENEFICIARY DETAILS

#	Name	Account Number	Amount (In Lakhs)	Remarks
1	ASSAM ELECTRICITY GRID CORPORATION LIMITED	10566984188	1151.70000	Book Adjustment only

COPY FORWARDED TO

1. The Accountant General (A&E) Assam, Maidamgaon, Beltola, Guwahati-29.
2. The Accountant General (Audit), Assam, Maidamgaon, Guwahati-29
3. The Chief Inspectorate of Electricity, Assam.
4. Finance (EC-I/II/III) Dept.
5. Finance (Budget) Dept.
6. General Administration (Secretariat Accounts) Deptt.
7. Treasury Officer, Dispur

This is a computer generated document and doesn't require any Signature/Seal

FINANCIAL SANCTION

सत्यमेव जयते

Government Of Assam

Power (Electricity) Department

Sanction No: FS/pe_2023-24(I)_34

Sanction Date: 12-10-2023

To,

Accountant General (A&E) Assam, Maidamgaon, Beltola, Guwahati-29

PURPOSE/SCHEME	Conversion of Government of Assam Grants to AEGCL into Equity, as on 31.03.2023

Proposal No. : FS-pe-2023-24-00042

Administrative Approval : Not Applicable

Dept. File No : 388656

Financial Year : 2023-24

Grant No : 62

Finance Concurrence Remarks: N/A

Finance Concurrence No : -N/A-

Sanctioned to : DIS/SAD/001 , General Administration (Secretariat Accounts) Deptt.

Sanctioned by: Mr. Sanjib Sarma AFS,Senior Financial Advisor, Power (Electricity) Department

HOA : 4801-80-190-2063-501-20-99-SOPD-ODS-V-GA

DFP Rules: Cabinet approval dated 08/09/2023

Whether this work/scheme/program etc. has Forest Royalty due to the Government? : N/A

Financial Sanction of the competent authority is hereby accorded for an amount not exceeding **Rs.13439.81000 Lakhs (Rupees One Hundred and Thirty Four Crore Thirty Nine Lakh Eighty One Thousand only)** towards the payment subject to the following terms and conditions:

TERMS & CONDITIONS

1. All norms in Assam Financial Rules, AFRBM Act 2005, CVC Guidelines, Assam Public Procurement Act 2017, Assam Public Procurement Rules 2021 and similar directives from Finance Department issued from time to time is to be strictly followed invariably.
2. The admissible deductions can be deducted and deposited into the Govt. Account by the Concerned Authority as per rule/ Govt. Instructions.
3. Work to be completed within the estimated cost in all respect without involving cost and time over run.

BENEFICIARY DETAILS

#	Name	Account Number	Amount (In Lakhs)	Remarks
1	ASSAM ELECTRICITY GRID CORPORATION LIMITED	10566984188	13439.81000	Book Adjustment only

COPY FORWARDED TO

1. The Accountant General (A&E) Assam, Maidamgaon, Beltola, Guwahati-29.
2. The Accountant General (Audit), Assam, Maidamgaon, Guwahati-29
3. The Chief Inspectorate of Electricity, Assam.
4. Finance (EC-I/II/III) Dept.
5. Finance (Budget) Dept.
6. General Administration (Secretariat Accounts) Deptt.
7. Treasury Officer, Dispur

This is a computer generated document and doesn't require any Signature/Seal

Annexure – XII
SAMAST Status Report

Progress Reports on SAMAST Project as on November' 23

S.N	Item	Responsibility	Description of work	Status	Remarks
1	**DATA CENTRE HARDWARE**	Infotek Services, Kolkata	Installation work of the Data Centre Hardware items. (i.e. Database server, Virtualization server, CDCS server, SAN, NAS, Firewall and UPS system & Battery bank has already been installed and commissioned at SLDC Data Centre.	100%	Completed, Defect liabilities started from 1st July 2023.
2	**DATA CENTRE SOFTWARE**	Infotek Services, Kolkata	Activation of Replication software, back up & Recovery software, Virtualization Software (VM ware), Windows server Operating system, User Client access license (CAL), Manage Engine OP manager professional Edition, Manage Engine Patch Manager, Installation of Operating software and MDAS application at CDCS server is completed	100%	
3	**Associated IT services**	SLDC	• High Speed internet connection has been procured from M/s Power-tel Ltd. • Installation completed for MPLS connectivity in GPRS network for secured metered data collection from Substations to Data center • LAN connectivity for workstation for SAMAST has been completed. • Procured Domain name, SSL certificate, SMS gateway, Mail service etc. for hosting SLDC website • Firewall for Power-tel lease line has been procured & installed as per cyber security guidelines.	100%	.
4	**SOFTWARE MODULE DEVELOPMENT**	PwC, Kolkata	PwC, Kolkata has completed the_Software development activities on Scheduling, Open Access, CMS website & MDM module, E-Log-book module, Energy accounting and MIS module. Development of the software modules are completed and installed at production environment.	100%	Completed, Defect liabilities started from 1st July 2023.

5	**Mass Installation of ABT energy meter with AMR at 220kV, 132kV level**	Genus Infrastructure Pvt Ltd.	Completed in the AEGCL Grid Substations.	99%	8 Nos of IEM to be installed at NTPS & NRPP
6	**Cyber security**	PwC & Genus	1. Installation of Firewall by M/s PwC for the IT part is completed. 2. Installation of firewall by M/s Genus for the communication server at data center is completed. 3. Installation & commissioning of Firewall with Unified Threat Protection (UTP), Advance Malware protection, Application control, Web & video filtering, Antispam service etc. for internet lease line (Power Tel) is completed on 02.09.2022	100%	Firewall and antivirus activated till date. VAPT done.
7	**Mass Installation of ABT energy meter along with BCS software and metering PC at T-D interface points (33kV feeders of AEGCL GSSs) under AERC Tariff fund.**	Secure Meter Ltd.	Mass installation of ABT energy meters along with metering PC and BCS software at GSSs of AEGCL is Completed.	100%	Completed, Defect liabilities started from 1st September' 2023.