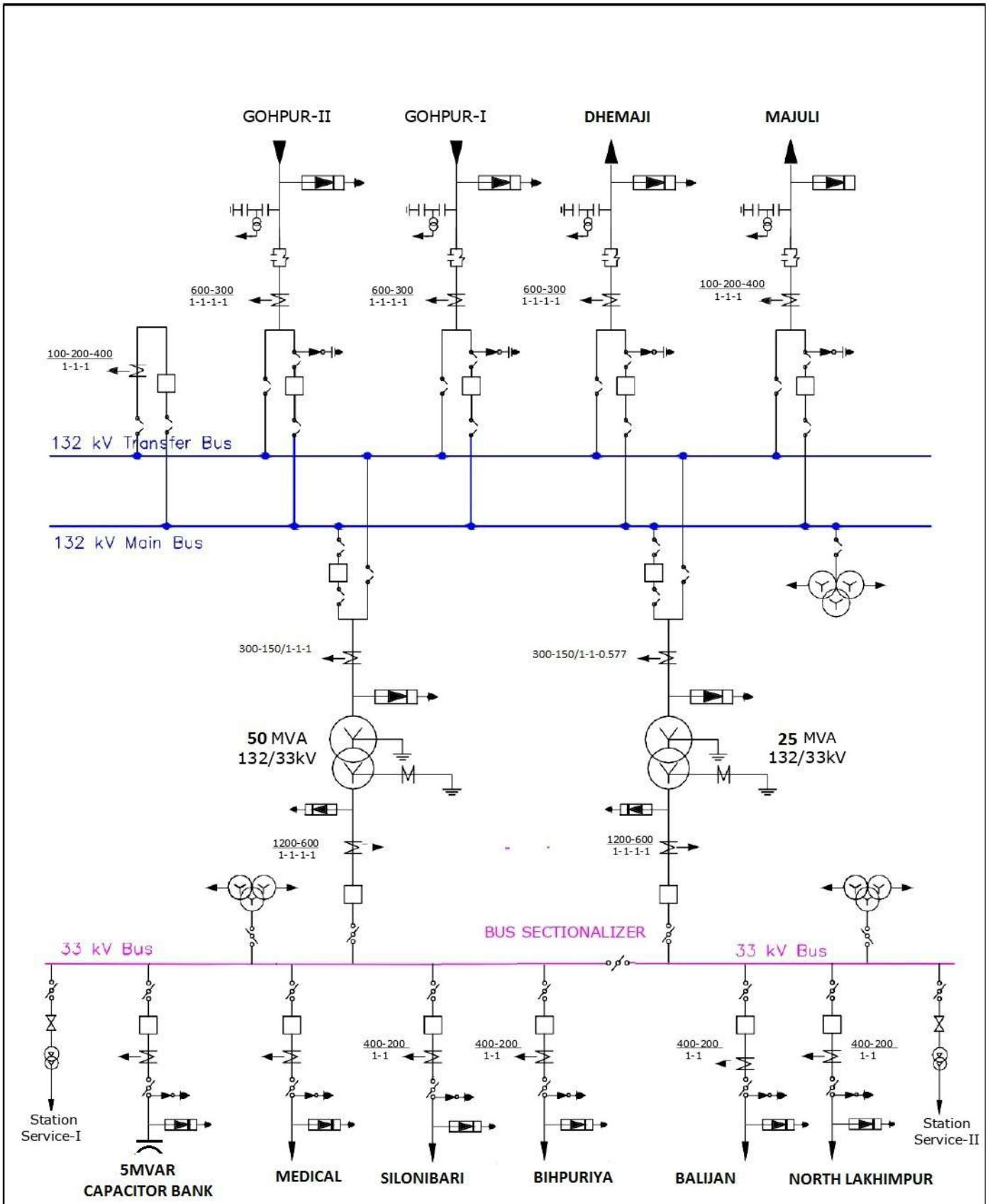


EQUIPMENT LEGENDS

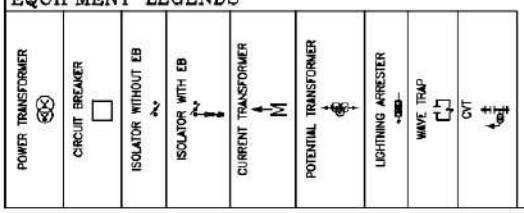


ASSAM ELECTRICITY GRID CORPORATION LIMITED

132KV NALKATA, TYPE-I SUB-STATION

SINGLE LINE DIAGRAM OF 132KV NALKATA, TYPE-I GSS, NORTH LAKHIMPUR

DRAWING NO.:

DATE: 19:09:2022